445/2M/1

FRAMELESS GLASS PIVOT DOOR HARDWARE

Product Image

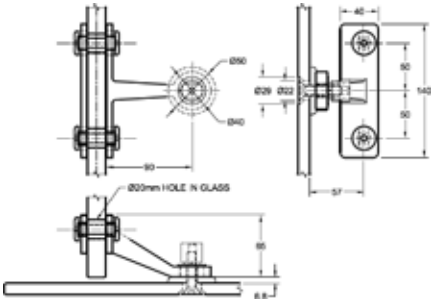

Dimensions

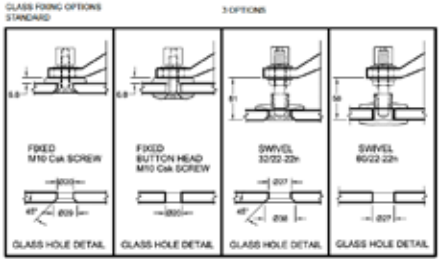

Glass Preparation

DETAILS

<u>Heavy Duty Spider</u>

- Standard with M10 Countersunk fixing or the 3 other options shown
- Available without backplate
- Larger glass preparation diagrams on page 3.8k
- Specify glass thickness and fixing type

FINISHES

- Polished
- Satin

Base material: 316 Stainless Steel