FREESTYLE™

AUSTRALIAN MADE

Square Bath Screen

SINGLE AND DUAL PANEL BATH SCREEN SYSTEMS

PRODUCT SPECIFICATION

AUSTRALIAN STANDARDS COMPLIANT

- ☑ POWDER COATING
- ☑ ANODISING
- ☑ EXTRUSION
- ☑ CHROME COMPONENT
- ☑ GOLD PLATING COMPONENT
- ☑ SAFETY GLASS

DIAS™

01 APRIL 2014

P 02 9522 3983

E customer.service@mfgs.com.au

www.mfgs.com.au

MODERN FRAMELESS GLASS SYSTEMS

© Copyright

FREESTYLE™ SQUARE BATH SCREEN SINGLE & DUAL PANEL

PRE-FABRICATED FRAMELESS BATH SCREEN SYSTEM

PRODUCT SPECIFICATION

FEATURING:

FRBSSQSP: Freestyle Square Bath Screen Single Panel

FRBSSQDP: Freestyle Square Bath Screen Dual Panel

DIAS FREESTYLE™ SQUARE BATH SCREEN is a Trade Mark (No. 632919) of Dias Aluminium Products Pty. Ltd. (Trade Mark No.'s. 649629, 611384, 641905) A.C.N. 006 422 500 A.B.N. 96 299 380 495 and is permitted for use by authorised Dias distributors. © 2014 Dias Aluminium Products Pty. Ltd. All rights reserved. Excluding authorised Dias distributors, no part of this document may be reproduced, transmitted in any form by any means, electronic, electrostatic, magnetic tape, mechanical, photocopying, recording or otherwise, without permission by Dias Aluminium Products Pty. Ltd.

01 APRIL 2014

DIAS™

P 02 9522 3983

E customer.service@mfgs.com.au

www.mfgs.com.au

MFGS
MODERN FRAMELESS GLASS SYSTEMS

© Copyright

FREESTYLE™ SQUARE BATH SCREEN SINGLE & DUAL PANEL

PRE-FABRICATED FRAMELESS BATH SCREEN SYSTEM

PRODUCT SPECIFICATION

INTRODUCTION

We are pleased to announce the introduction of the **Freestyle™ Square Bath Screen** systems range. Architecturally inspired minimalist square design, the **Freestyle™ Square Bath Screen** systems are available at a convenient height of 1500mm in both single and dual panel configurations. **Freestyle™ Square Bath Screen** systems carry a 5 year product guarantee on components and frames.

Proudly Australian Made, both **FRBSSQSP: Freestyle Square Bath Screen Single Panel** and the **FRBSSQDP: Freestyle Square Bath Screen Dual Panel** products are highly functional featuring modern aesthetically pleasing design. **Freestyle™ Square Bath Screen** systems are exceptionally quick and easy to install and represent excellent value for money.

The **FRBSSQSP: Freestyle Square Bath Screen Single Panel** and the fully articulated **FRBSSQDP: Freestyle Square Bath Screen Dual Panel** architectural designs are exceptionally versatile and offer a great range of product features; safety, quality, ease of adjustment and installation. Please refer to the "features and benefits" schedule for complete details.

The **FRBSSQSP: Freestyle Square Bath Screen Single Panel** is available in Almond Cream (AC) & White (WH) powder coat and Bright Natural (BN) and Matt Natural (MN) anodised finishes ex-stock.

FRBSSQDP: Freestyle Square Bath Screen Dual Panel is available in a combination of Almond Cream (AC) & White (WH) powder coat and Bright Natural (BN) and Matt Natural (MN) anodised finishes with Satin Chrome (SC) and Chrome Plate (CP) hinge finishes.

Special sizes and or colours are available on request. Please contact your Dias Sales Manager or Customer Service Sales Administration Representative for further details.

CONTENTS

CONTENTS	PAGE (S)
Introduction	1
Brochure	Insert
Standard Configuration & General Specifications • Single Panel • Dual Panel	2 - 3
Technical Specification	4
Features & Benefits	5
General Assembly Schedules • Single Panel • Dual Panel	6
Installation Instructions	7 - 8
Price List - 01/11/2013	9
Order Sheet	10
Order Sheet & Price List - 01/11/2013: Brochure(s) & Artwork	11

DIAS FREESTYLE™ SQUARE BATH SCREEN is a Trade Mark (No. 632919) of Dias Aluminium Products Pty. Ltd. (Trade Mark No.'s. 649629, 611384, 641905) A.C.N. 006 422 500 A.B.N. 96 299 380 495 and is permitted for use by authorised Dias distributors. © 2014 Dias Aluminium Products Pty. Ltd. All rights reserved. Excluding authorised Dias distributors, no part of this document may be reproduced, transmitted in any form by any means, electronic, electrostatic, magnetic tape, mechanical, photocopying, recording or otherwise, without permission by Dias Aluminium Products Pty. Ltd.

P 02 9522 3983
E customer.service@mfgs.com.au
www.mfgs.com.au

MODERN FRAMELESS GLASS SYSTEMS

© Copyright

FREESTYLE™ SQUARE BATH SCREEN SINGLE & DUAL PANEL

PRE-FABRICATED FRAMELESS BATH SCREEN SYSTEM

STANDARD CONFIGURATION & GENERAL SPECIFICATIONS

FREESTYLE™ SQUARE BATH SCREEN - SINGLE PANEL (Drawings Not To Scale)

PRODUCT CODE:

FRBSSQSP

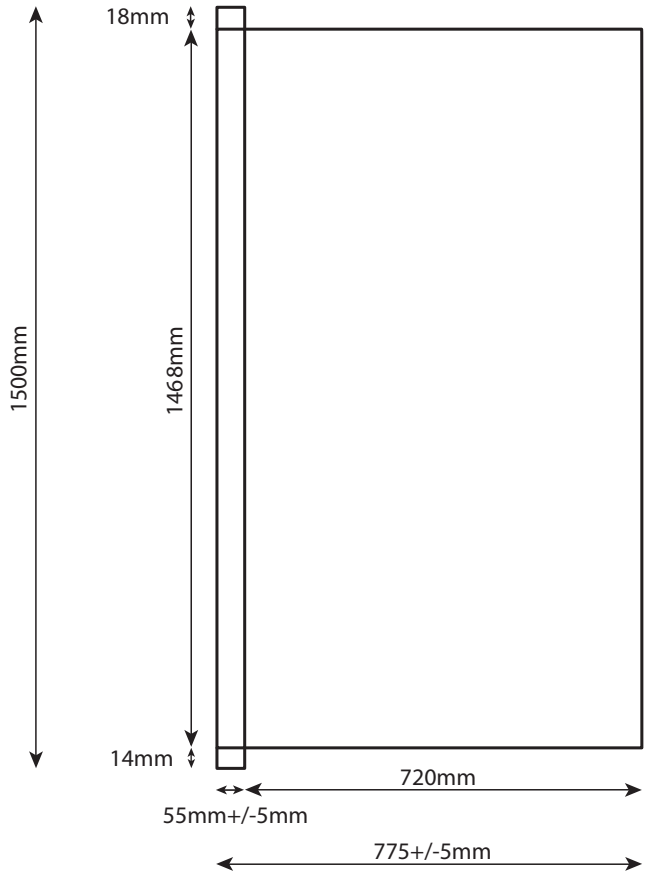

SINGLE PANEL:

(SWINGS THROUGH 180°)

Provides easy entry/exit to shower area.

Bath Screen easily and conveniently swings to locate at 90° and 180° against bathroom wall, both to the inside and outside of the bath, to maximise use of bathroom area.

Provides for a drier, safer bathroom floor.

Easy to clean.

Dimensions: 1500mm high x 775mm (+/- 5)mm wide (finished size)
10mm wall channel adjustment for out-of-square installations

Weight: 17kg (Excludes packaging)

DIAS FREESTYLE™ SQUARE BATH SCREEN is a Trade Mark (No. 632919) of Dias Aluminium Products Pty. Ltd. (Trade Mark No.'s. 649629, 611384, 641905) A.C.N. 006 422 500 A.B.N. 96 299 380 495 and is permitted for use by authorised Dias distributors. © 2014 Dias Aluminium Products Pty. Ltd. All rights reserved. Excluding authorised Dias distributors, no part of this document may be reproduced, transmitted in any form by any means, electronic, electrostatic, magnetic tape, mechanical, photocopying, recording or otherwise, without permission by Dias Aluminium Products Pty. Ltd.

DIAS™
© Copyright

P 02 9522 3983
E customer.service@mfgs.com.au
www.mfgs.com.au

MFGS
MODERN FRAMELESS GLASS SYSTEMS

FREESTYLE™ SQUARE BATH SCREEN SINGLE & DUAL PANEL

PRE-FABRICATED FRAMELESS BATH SCREEN SYSTEM

STANDARD CONFIGURATION & GENERAL SPECIFICATIONS

FREESTYLE™ SQUARE BATH SCREEN - DUAL PANEL (Drawings Not To Scale)

PRODUCT CODE:

FRBSSQDP

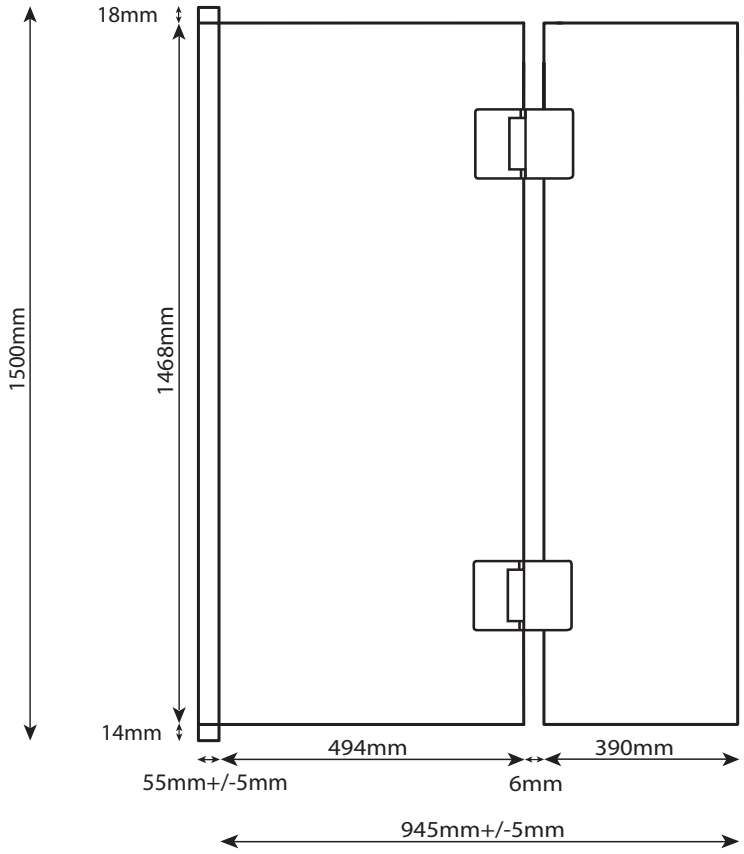

DUAL PANEL:

(PANELS 1 & 2 SWING THROUGH 180° & 205° RESPECTIVELY)

Provides easy entry/exit to shower area.

Bath Screen easily and conveniently swings to locate at 90° and 180° against bathroom wall, both to the inside and outside of the bath, to maximise use of bathroom area.

First panel swings through 180° and second fully articulated panel folds both partially inwards (25°) and completely outwards (180°) for convenient fold away and/or additional splash resistance as required.

Provides for a drier, safer bathroom floor.

Easy to clean.

Dimensions: 1500mm high x 945 (+/- 5)mm wide (finished size)

Wall Panel: 543mm wide; Articulated Panel: 390mm wide
10mm wall channel and 4mm hinge adjustment for out-of-square installations.

Weight: 21kg (Excludes packaging)

DIAS FREESTYLE™ SQUARE BATH SCREEN is a Trade Mark (No. 632919) of Dias Aluminium Products Pty. Ltd. (Trade Mark No.'s. 649629, 611384, 641905) A.C.N. 006 422 500 A.B.N. 96 299 380 495 and is permitted for use by authorised Dias distributors. © 2014 Dias Aluminium Products Pty. Ltd. All rights reserved. Excluding authorised Dias distributors, no part of this document may be reproduced, transmitted in any form by any means, electronic, electrostatic, magnetic tape, mechanical, photocopying, recording or otherwise, without permission by Dias Aluminium Products Pty. Ltd.

DIAS™
© Copyright
P 02 9522 3983
E customer.service@mfgs.com.au
www.mfgs.com.au
MFGS
MODERN FRAMELESS GLASS SYSTEMS

FREESTYLE™ SQUARE BATH SCREEN SINGLE & DUAL PANEL

PRE-FABRICATED FRAMELESS BATH SCREEN SYSTEM

TECHNICAL SPECIFICATION SCHEDULE

CRITERIA	SPECIFICATION
Frame-Aluminium Extrusion	
Temper:	T5
Typical Wall Thickness:	1.2mm, 1.3mm
Alloy:	6060, 6063 (6463 trim where specified)
Australian Standard No(s):	AS 1866
Powder Coating	
Colour Range:	7 Standard Colours (special colours and finishes available on request)
Paint:	Akzo Nobel, Dulux, Jotun and Valspar
Thickness:	50-70 micron (varies by colour)
Application:	Electromagnetic Oven Baking to 200°C
Australian Standard No(s):	AS3715: Metal Finishing – Thermoset Powder Coatings for Architectural Applications.
International Standard Ref:	Qualicoat
Indicative Gloss Level:	7% - 90% (dependent on colour)
Hardness:	H
Nominal Film Thickness:	60 Microns
Anodising	
Colour Range:	7 Standard Colours/Finishes (i.e. Matt Natural **[MN]**, Matt Gold **[MG]**, Matt Bronze **[MB]**, Bright Natural **[BN]**, Bright Gold **[BG]**, Bright Bronze **[BB]**, Bright Satin **[BS]**. Over 25 Special Colours/Finishes available on Request
Thickness:	BN : 5-7, MN, BG, BS, MG : 7-10, BB, MB : 10 microns
Australian Standard No(s):	AS1231 (International Standard: Qualanod)
Indicative Gloss Level:	85% - 100%
Hardness:	7H(+)§
Nominal Film Thickness:	On Specification (10/20 Interior, 15/25 Exterior)
Componentry	
Pivot Blocks:	Celcon
Patch Hinge:	Die Cast Aluminium Alloy
Chrome Plate:	Electroplated Coating (Classification AI/NI206Crr)
Gold Plate:	Electroplated Coating (Classification AI/NI206Crr)
Screws:	304 Stainless Counter Sunk 6g Screw 44.3mm, M6 x 12 Socket Screw 304 Stainless Steel
	Rivets RA4.4AS 3.2mm x 9.9mm
Australian Standard No(s):	AS1192 Electroplated Coatings
Glazing Vinyl	
Extruded PVC:	PVC Compound. FC 416000/FC 259808 Containing Biocide (prevents mould growth)
Glass	
Application:	Product suitable for 6mm toughened glass
Australian Standard No(s):	AS1288 & AS2208
Legal and Intellectual Property Rights and Protection	
Applicable Design Registration No(s):	N/A
Patent(s):	N/A
Trade Mark(s):	611384, 641905, 649629, 632919
Copyright:	Applicable

DIAS FREESTYLE™ SQUARE BATH SCREEN is a Trade Mark (No. 632919) of Dias Aluminium Products Pty. Ltd. (Trade Mark No.'s. 649629, 611384, 641905) A.C.N. 006 422 500 A.B.N. 96 299 380 495 and is permitted for use by authorised Dias distributors. © 2014 Dias Aluminium Products Pty. Ltd. All rights reserved. Excluding authorised Dias distributors, no part of this document may be reproduced, transmitted in any form by any means, electronic, electrostatic, magnetic tape, mechanical, photocopying, recording or otherwise, without permission by Dias Aluminium Products Pty. Ltd.

DIAS™
© Copyright
P 02 9522 3983
E customer.service@mfgs.com.au
www.mfgs.com.au
MFGS
MODERN FRAMELESS GLASS SYSTEMS

FREESTYLE™ SQUARE BATH SCREEN SINGLE & DUAL PANEL

PRE-FABRICATED FRAMELESS BATH SCREEN SYSTEM

FEATURES & BENEFITS

FEATURES	BENEFITS
FRAMELESS DESIGN:	Aesthetically pleasing the frameless design creates a spacious modern uncluttered designer bathroom.
6MM TOUGHENED SAFETY GLASS:	Will not crack or splinter. Provides optimal safety. Complies with Australian Standards AS2208 and AS1288.
POLISHED EDGES AND SQUARE GLASS DESIGN:	1500mm high glass panels maximises safety with polished edges and improved splash resistance. Minimalist aesthetics create a pleasing appearance which compliments bathroom design/architecture.
RISE AND FALL 90° SELF-ALIGNMENT:	Square Bath Screen automatically aligns at 90° and seals with bath edge for optimal splash resistance, convenience and safety. Bath Screen will not 'wander' when in position over bath, due to the unique self-locating pivot block mechanism.
PREMIUM QUALITY AUSTRALIAN MADE CONSTRUCTION:	All Bath Screens are made in Australia with components and fittings manufactured from premium quality materials, which are guaranteed not to rust or corrode even in the most demanding of bathroom environments. Contoured profiles and component designs provide uncompromising quality and superb architectural appearance and finish.
QUICK AND SIMPLE TO INSTALL:	Cost effective, saving time and money/minimises cost. Provides excellent value for money.
POPULAR COLOUR RANGE:	Single and Dual Panel Square Bath Screens available in the following colour/finish combinations: **Wall Jambs:** White or Almond Cream powder coat and Bright Natural or Matt Natural anodised finishes. **Hinge:** Satin Chrome or Chrome Plate Finishes (Special colours are available on request).

DIAS FREESTYLE™ SQUARE BATH SCREEN is a Trade Mark (No. 632919) of Dias Aluminium Products Pty. Ltd. (Trade Mark No.'s. 649629, 611384, 641905) A.C.N. 006 422 500 A.B.N. 96 299 380 495 and is permitted for use by authorised Dias distributors. © 2014 Dias Aluminium Products Pty. Ltd. All rights reserved. Excluding authorised Dias distributors, no part of this document may be reproduced, transmitted in any form by any means, electronic, electrostatic, magnetic tape, mechanical, photocopying, recording or otherwise, without permission by Dias Aluminium Products Pty. Ltd.

DIAS™
P 02 9522 3983
E customer.service@mfgs.com.au
www.mfgs.com.au
MFGS
MODERN FRAMELESS GLASS SYSTEMS
© Copyright

FREESTYLE™ SQUARE BATH SCREEN SINGLE & DUAL PANEL

PRE-FABRICATED FRAMELESS BATH SCREEN SYSTEM

GENERAL ASSEMBLY SCHEDULE (Guide Only)

(Drawings Not To Scale)

SINGLE AND DUAL PANEL (PLAN)

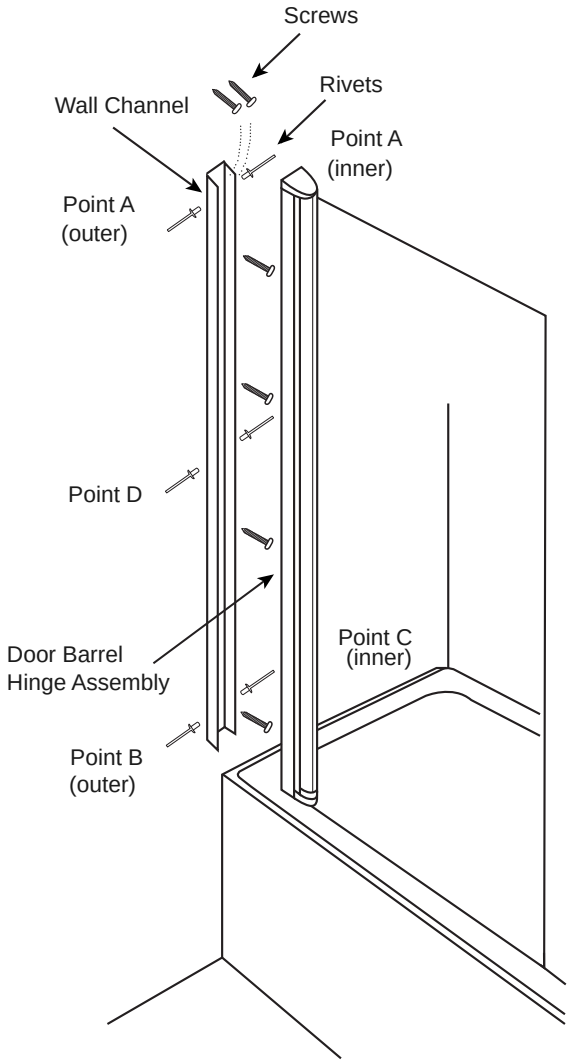

DETAIL A

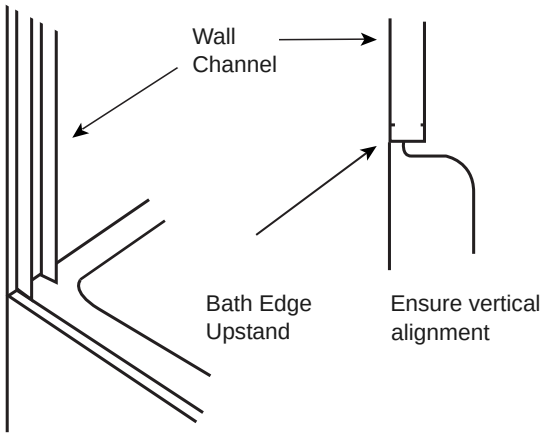

DETAIL B

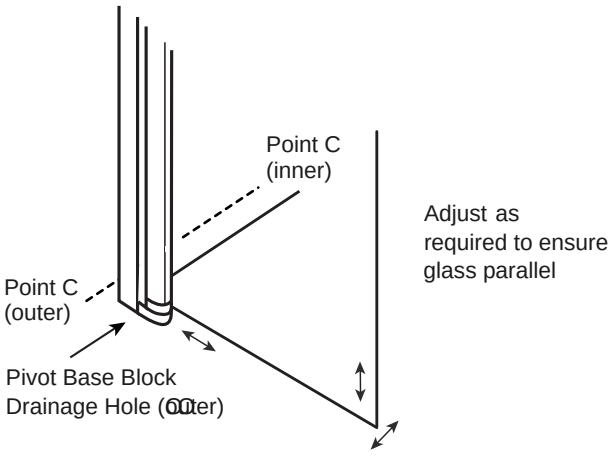

SPECIAL NOTES:

Important Do not use the unit until the silicone has completely cured (typically allow 24 hours): the bond between the wall channel and the wall is an integral part of the installation. Only use silicone manufactured with UV stabiliser and mould inhibitor.

Please Note: These fitting instructions assume that there is a solid fixing point available for the wall channel attachment to the wall. Where it is found that there is insufficient fixing behind the wall lining, a suitably fixed and braced timber batten must be securely attached to the wall and the wall channel fitted to it.

DIAS FREESTYLE™ SQUARE BATH SCREEN is a Trade Mark (No. 632919) of Dias Aluminium Products Pty. Ltd. (Trade Mark No.'s. 649629, 611384, 641905) A.C.N. 006 422 500 A.B.N. 96 299 380 495 and is permitted for use by authorised Dias distributors. © 2014 Dias Aluminium Products Pty. Ltd. All rights reserved. Excluding authorised Dias distributors, no part of this document may be reproduced, transmitted in any form by any means, electronic, electrostatic, magnetic tape, mechanical, photocopying, recording or otherwise, without permission by Dias Aluminium Products Pty. Ltd.

DIAS™
© Copyright
P 02 9522 3983
E customer.service@mfgs.com.au
www.mfgs.com.au
MFGS
MODERN FRAMELESS GLASS SYSTEMS

FREESTYLE™ SQUARE BATH SCREEN SINGLE & DUAL PANEL

PRE-FABRICATED FRAMELESS BATH SCREEN SYSTEM

INSTALLATION INSTRUCTIONS

SECTION PROVIDED	RECOMMENDED PROCEDURE
SINGLE PANEL INSTALLATION KIT SUPPLIED CONTAINS THE FOLLOWING: 6 x 63mm x 8g Stainless Steel Screws & Washers 6 x 3.2mm Aluminium Pop Rivets 6 x Colour-coded Snap Caps and Plastic Washers 1 x Allen Key (supplied with Dual Panel models only)	1. Fit wall channel to the wall as per general assembly schedule diagram; with the outside edge of the wall channel vertically aligned with the edge of the bath and the bottom of the wall channel touching the top of the bath (refer to Detail A on page 6). 2. The wall channel must be adequately secured and have a good bead of silicone between it and the wall to help distribute the weight of the bath screen to the wall lining. This process is especially critical when installing the dual panel bath screen door. 3. The six 63mm x 8g stainless steel screws and washers (supplied in the installation kit) are for attaching the wall channel to the wall and should be screwed directly through the wall channel (equally spaced with washers) into the structural sub-frame of the wall. Drill holes into the wall channel where required using a 4.2 - 4.5mm high speed drill bit. Alternative equivalent fixing may be required depending upon wall and sub-frame circumstances (e.g. timber or metal stud, concrete or masonry wall etc.). 4. Slide the door barrel hinge assembly into the securely fixed wall channel and position the glass panel(s) parallel with the top of the bath by moving the screen in or out of the wall channel (refer to Detail B on page 6). Drill through the wall channel into the barrel hinge at approximately 40mm from the top of the door using a 3.3mm high speed drill bit at “Point A” (outer-side) and fit a 3.2mm pop rivet with plastic washer and snap cap. Ensure plastic washer is fitted onto pop rivet before fixing. 5. After ensuring that the door remains level with the top of the bath, drill though the wall channel at “Point B” (outer-side) approximately 40mm from the bottom of the door, and fit a 3.2mm pop rivet, with plastic washer and snap cap. Ensure plastic washer is fitted onto pop rivet before fixing. The door should now hang unsupported and parallel with the top of the bath. 6. Ensure the door is square and inline to the up stand edge on the bath (refer to Detail B on page 6) by pushing on the pivot base block at “Point C” (outer). When the door is correctly aligned, drill and fit a 3.2mm pop rivet, with plastic washer and snap cap at “Point C” (inner-side; approximately 40mm from the bottom of the door). Ensure plastic washer is fitted onto pop rivet before fixing. 7. Once final check of door alignment has been achieved then three more fixing points need to be drilled and secured; one further 3.3mm hole needs to be drilled at “Point A” (inner-side) and a further two holes drilled at “Point D” (middle of the screen) on both inner and outer sides of the wall channel. Pop riveting with plastic washers and snap caps will complete the bath screen wall installation. Ensure plastic washer is fitted onto pop rivet before fixing.

DIAS FREESTYLE™ SQUARE BATH SCREEN is a Trade Mark (No. 632919) of Dias Aluminium Products Pty. Ltd. (Trade Mark No.'s. 649629, 611384, 641905) A.C.N. 006 422 500 A.B.N. 96 299 380 495 and is permitted for use by authorised Dias distributors. © 2014 Dias Aluminium Products Pty. Ltd. All rights reserved. Excluding authorised Dias distributors, no part of this document may be reproduced, transmitted in any form by any means, electronic, electrostatic, magnetic tape, mechanical, photocopying, recording or otherwise, without permission by Dias Aluminium Products Pty. Ltd.

DIAS™
© Copyright
P 02 9522 3983
E customer.service@mfgs.com.au
www.mfgs.com.au
MFGS
MODERN FRAMELESS GLASS SYSTEMS

FREESTYLE™ SQUARE BATH SCREEN SINGLE & DUAL PANEL

PRE-FABRICATED FRAMELESS BATH SCREEN SYSTEM

INSTALLATION INSTRUCTIONS

SECTION PROVIDED	RECOMMENDED PROCEDURE
SINGLE PANEL INSTALLATION: Cont…	8. Fit the spray flap supplied to the bottom edge of the door and silicone outside drainage hole of pivot base block to complete installation. **Important** Do not use the unit until the silicone has completely set (typically allow 24 hours): the bond between the wall channel and the wall is an integral part of the installation.
DUAL PANEL INSTALLATION KIT SUPPLIED CONTAINS THE FOLLOWING: 8 x 63mm x 8g Stainless Steel Screws & Washers 6 x 3.2mm Aluminium Pop Rivets 6 x Colour-coded Snap Caps and Plastic Washers 1 x Allen Key (supplied with Dual Panel models only)	1. **For Dual Panel Bath Screen Only** Use main steps of single panel installation instructions as per page 7 and 8. **Important:** when required, glass-to-glass hinges may need to be reversed depending on installation direction. Prior to reversing hinges ensure bath screen orientation is correct. Rise and fall of base pivot block must be located at bottom of the bath screen. Additional hinge adjustment between the first and second panel is possible as follows: 2. **Extreme Care Required** a) Carefully remove the hinge screw clamp dress caps with a flat knife or similar device. b) With the first and second panels well secured with bottom edge of second panel protected, carefully slightly loosen (but do not undo) clamping screws on both hinges with the Allen Key supplied and adjust alignment. (If reversing hinges, completely undo Allen screws and reverse and firmly re-secure each hinge one at a time.) c) Adjust second panel relative location to first panel as desired. d) Re-tighten clamping screws and replace screw clamp dress caps. 3. Fit water seal between dual panel glass then spray flaps to bottom edges of the screen. 4. Silicone seal outside drainage hole of pivot base block to complete installation. **Please Note:** These fitting instructions assume that there is solid fixing available for the wall channel attachment to the wall. Where it is found that there is insufficient fixing behind the wall lining, a suitably fixed and braced timber batten must be securely attached to the wall and the wall channel fitted to it.

DIAS FREESTYLE™ SQUARE BATH SCREEN is a Trade Mark (No. 632919) of Dias Aluminium Products Pty. Ltd. (Trade Mark No.'s. 649629, 611384, 641905) A.C.N. 006 422 500 A.B.N. 96 299 380 495 and is permitted for use by authorised Dias distributors. © 2014 Dias Aluminium Products Pty. Ltd. All rights reserved. Excluding authorised Dias distributors, no part of this document may be reproduced, transmitted in any form by any means, electronic, electrostatic, magnetic tape, mechanical, photocopying, recording or otherwise, without permission by Dias Aluminium Products Pty. Ltd.

DIAS™
© Copyright

P 02 9522 3983
E customer.service@mfgs.com.au
www.mfgs.com.au

MFGS
MODERN FRAMELESS GLASS SYSTEMS

FREESTYLE™ SQUARE BATH SCREEN SINGLE & DUAL PANEL

PRE-FABRICATED FRAMELESS BATH SCREEN SYSTEM

PRICE LIST - 01/11/2013 (EXCLUDES G.S.T.)

FREESTYLE™ SQUARE BATH SCREEN - SINGLE PANEL

CODE	DESCRIPTION	WEIGHT	PRICE $	WALL JAMB
FRBSSQSP	Freestyle Square Bath Screen Single Panel	20kg		AC-BN-MN-WH
FRBSSQSP/SPEC	Freestyle Square Bath Screen Single Panel Special	TBA		AC-BG-BN-MN-WH

FREESTYLE™ SQUARE BATH SCREEN - DUAL PANEL

CODE	DESCRIPTION	WEIGHT	PRICE $	WALL JAMB	HINGE
FRBSSQDP	Freestyle Square Bath Screen Dual Panel	24kg		BN	CP
				MN	SC
				WH	CP
FRBSSQDP/SPEC	Freestyle Square Bath Screen Dual Panel Special	TBA		AC-BN-MN-WH	CP-SC

COLOUR KEY:	**AC** = ALMOND CREAM	**AI** = ALMOND IVORY	**APO** = APO GREY	**BB** = BRIGHT BRONZE	**BG** = BRIGHT GOLD
BL = BLACK	**BN** = BRIGHT NATURAL	**BS** = BRIGHT SATIN	**BR** = BROWN	**CL** = CLEAR	**CP** = CHROME PLATED
FR = FROST	**GO** = GOLD	**GP** = GOLD PLATED	**MB** = MATT BRONZE	**MG** = MATT GOLD	**MN** = MATT NATURAL
P/COAT = POWDER COAT	**SC** = SATIN CHROME	**SV** = SILVER	**WB** = WHITE BIRCH	**WG** = WILD GREY	**WH** = WHITE

DIAS FREESTYLE™ SQUARE BATH SCREEN is a Trade Mark (No. 632919) of Dias Aluminium Products Pty. Ltd. (Trade Mark No.'s. 649629, 611384, 641905) A.C.N. 006 422 500 A.B.N. 96 299 380 495 and is permitted for use by authorised Dias distributors. © 2014 Dias Aluminium Products Pty. Ltd. All rights reserved. Excluding authorised Dias distributors, no part of this document may be reproduced, transmitted in any form by any means, electronic, electrostatic, magnetic tape, mechanical, photocopying, recording or otherwise, without permission by Dias Aluminium Products Pty. Ltd.

DIAS™
© Copyright

P 02 9522 3983
E customer.service@mfgs.com.au
www.mfgs.com.au

MFGS
MODERN FRAMELESS GLASS SYSTEMS

FREESTYLE™ SQUARE BATH SCREEN SINGLE & DUAL PANEL

PRE-FABRICATED FRAMELESS BATH SCREEN SYSTEM

ORDER SHEET

FREESTYLE™ SQUARE BATH SCREEN - SINGLE PANEL

CODE	DESCRIPTION	WEIGHT	COLOUR / FINISH			
			AC	BN	MN	WH
FRBSSQSP	Freestyle Square Bath Screen Single Panel	20kg				
FRBSSQSP/SPEC	Freestyle Square Bath Screen Single Panel Special	TBA				

FREESTYLE™ SQUARE BATH SCREEN - DUAL PANEL

CODE	DESCRIPTION	COLOUR / FINISH							
		WALL JAMB	AC		BN		MN	WH	
		HINGE	CP	SC	CP	SC	SC	CP	SC
FRBSSQDP	Freestyle Square Bath Screen Dual Panel	24kg							
FRBSSQDP/SPEC	Freestyle Square Bath Screen Dual Panel Special	TBA							

COLOUR KEY:	**AC** = ALMOND CREAM	**AI** = ALMOND IVORY	**APO** = APO GREY	**BB** = BRIGHT BRONZE	**BG** = BRIGHT GOLD
BL = BLACK	**BN** = BRIGHT NATURAL	**BS** = BRIGHT SATIN	**BR** = BROWN	**CL** = CLEAR	**CP** = CHROME PLATED
FR = FROST	**GO** = GOLD	**GP** = GOLD PLATED	**MB** = MATT BRONZE	**MG** = MATT GOLD	**MN** = MATT NATURAL
P/COAT = POWDER COAT	**SC** = SATIN CHROME	**SV** = SILVER	**WB** = WHITE BIRCH	**WG** = WILD GREY	**WH** = WHITE

ACCOUNT NO:					DELIVERY / SHIPPING DETAILS:
NAME:					
ADDRESS:					
					VIA:
ORDER NO:	DATE:				

INTERNAL DIAS USE: CONTINUOUS PRIORITY CUSTOMER SERVICE COMMITMENT			
ADMINISTRATOR:	PICKER:	PACKER:	DESPATCHER:

DIAS FREESTYLE™ SQUARE BATH SCREEN is a Trade Mark (No. 632919) of Dias Aluminium Products Pty. Ltd. (Trade Mark No.'s. 649629, 611384, 641905) A.C.N. 006 422 500 A.B.N. 96 299 380 495 and is permitted for use by authorised Dias distributors. © 2014 Dias Aluminium Products Pty. Ltd. All rights reserved. Excluding authorised Dias distributors, no part of this document may be reproduced, transmitted in any form by any means, electronic, electrostatic, magnetic tape, mechanical, photocopying, recording or otherwise, without permission by Dias Aluminium Products Pty. Ltd.

© Copyright

P 02 9522 3983
E customer.service@mfgs.com.au
www.mfgs.com.au

MODERN FRAMELESS GLASS SYSTEMS

FREESTYLE™ SQUARE BATH SCREEN SINGLE & DUAL PANEL

PRE-FABRICATED FRAMELESS BATH SCREEN SYSTEM

ORDER SHEET & PRICE LIST - 01/11/2013: BROCHURE(S) & ARTWORK

BROCHURE(S) - FREESTYLE™ SQUARE BATH SCREEN

ORDER CODE	DESCRIPTION	PRICE	PER	ORDER QUANTITY
ARTWORK	**FREESTYLE SQUARE BATH SCREEN** Brochure - **Artwork**		1	
SQFSBSB	**FREESTYLE SQUARE BATH SCREEN** Brochure - **Blank**		100	
SQFSBSO	**FREESTYLE SQUARE BATH SCREEN** Brochure - **Overprinted**		1000	

Please Note:

- **Artwork** cost only applies for initial brochure or reset overprint set-up.
- **Blank** brochures available per **100**.
- **Overprinted** brochures available **per 1000** due to minimum run.

DIAS BROCHURE ARTWORK - FREESTYLE™ SQUARE BATH SCREEN SUPPLIED IN PDF (PORTABLE DOCUMENT FORMAT)

To order your Dias artwork please contact your Dias Sales Manager/Representative or Customer Service Sales Administration Representative who will be pleased to arrange for your requirements to be forwarded via email or mail directly to you or your Sales Promotion/Advertising provider (e.g. Local newspaper, etc.).

Alternatively, please fill in your name and address details in the area below and send via **fax 03 9795 4966** or **email** dias@dias.com.au to Dias (or visit our website at **www.dias.com.au**) and we will be pleased to immediately assist with your requirements.

Please contact me to make arrangements for supply of **Dias Brochure Artwork** requirements. ☐

ACCOUNT NO:	DELIVERY / SHIPPING DETAILS:
NAME:	
ADDRESS:	
	VIA:
ORDER NO: DATE:	

INTERNAL DIAS USE: CONTINUOUS PRIORITY CUSTOMER SERVICE COMMITMENT			
ADMINISTRATOR:	PICKER:	PACKER:	DESPATCHER:

DIAS FREESTYLE™ SQUARE BATH SCREEN is a Trade Mark (No. 632919) of Dias Aluminium Products Pty. Ltd. (Trade Mark No.'s. 649629, 611384, 641905) A.C.N. 006 422 500 A.B.N. 96 299 380 495 and is permitted for use by authorised Dias distributors. © 2014 Dias Aluminium Products Pty. Ltd. All rights reserved. Excluding authorised Dias distributors, no part of this document may be reproduced, transmitted in any form by any means, electronic, electrostatic, magnetic tape, mechanical, photocopying, recording or otherwise, without permission by Dias Aluminium Products Pty. Ltd.

NOTES:

NOTES:

NOTES:

P 02 9522 3983

E customer.service@mfgs.com.au

www.mfgs.com.au

MFGS
MODERN FRAMELESS GLASS SYSTEMS

VIC HEAD OFFICE
201 - 205 Browns Road
Noble Park North VIC 3174
Telephone: 03 9795 4444
Toll Free: 1800 334 070
Facsimile: 03 9795 4966

NSW BRANCH
2 / 11 Deadman Road
Moorebank NSW 2170
Telephone: 02 9600 6600
Facsimile: 02 9600 9911

QLD BRANCH
40 - 42 Newheath Drive
Arundel QLD 4214
Telephone: 07 5500 0788
Facsimile: 07 5500 0799

WA BRANCH
73 - 75 Catalano Circuit
Canning Vale WA 6155
Telephone: 08 9456 4044
Facsimile: 08 9456 4344

DIAS™

DIAS ALUMINIUM PRODUCTS PTY. LTD.

A.C.N. 006 422 500 A.B.N. 96 299 380 495

For more information visit: www.dias.com.au or email: dias@dias.com.au

Notice to Customers

While Dias has endeavoured to ensure that all representations, specifications, prices and descriptions contained in these materials are correct at the time of printing, product features, prices and specifications are subject to change without notice. Dias reserves the right to change or upgrade product specifications at anytime without notice. Specifications are subject to tolerances due to manufacturing conditions and between production cycles and sources. The information contained in this document may need to be read in conjunction with other materials and information available from Dias. Product specifications and range of options may vary by country. To the extent permitted by law, Dias excludes all liability, whether direct, indirect, special or consequential, arising from negligence or otherwise, for any non-compliance by any product with any specifications, descriptions, representations, pictures, colour or other information contained in this document. Where, by law, Dias is not permitted to exclude its liability, its liability will be limited to, at its discretion, fixing the goods, supplying the goods again or supplying equivalent goods. Authorised distributorship fabricator compliance requires componentry supply only in conjunction with extrusions to protect Copyright(s), Trademark(s), Design Registration(s), Patent(s) and Australian Design Award(s) registration status where applicable.

MIX
Paper from responsible sources
FSC® C015144