GEZE SLIDING FITTING SYSTEMS

SLEEK TECHNOLOGY - HIGHLY DURABLE

Cover photo: Studio BE, photo on page 2: Siegelwerk GmbH

TABLE OF CONTENTS

Introduction: Sleek technology - highly durable	**4**
Overview table for sliding fitting systems	**5**
GEZE Rollan 40 N / Rollan 80	**6**
GEZE Rollan 40 N SoftStop	**11**
GEZE glass clamping plate 45 mm GEZE Rollan	**15**
GEZE glass clamping plate 30 mm GEZE Rollan	**18**
GEZE Perlan 140	**20**
GEZE Perlan 140 accessories	**30**
GEZE glass clamping plate 45 mm GEZE Perlan	**32**
GEZE glass clamping plate 30 mm GEZE Perlan	**35**
GEZE Perlan SoftStop	**37**
GEZE Perlan 140 GGS	**41**
GEZE Perlan 140 concealed wall bracket	**45**
GEZE Perlan 140 spacer profile for concealed wall bracket	**48**
GEZE Perlan 140 clip cover	**50**
GEZE Perlan 140 clip cover 100	**52**
GEZE Perlan 140 fixed panel	**54**
GEZE Perlan 140 Duosync	**57**
GEZE Perlan 140 Telescope	**61**
GEZE Perlan KS	**64**
GEZE Perlan 140 wall attachment bracket with weather canopy	**67**
GEZE Perlan 140 bottom guides for sliding shutters	**70**
GEZE Perlan AUT 2	**73**
GEZE Perlan AUT-NT	**78**
GEZE Levolan 60	**81**
GEZE Levolan 60 SoftStop	**89**
GEZE Levolan 150	**91**
GEZE Levolan 150 SoftStop	**99**
Product information for sliding fitting systems	**104**
Classification to EN 1527:1998	**105**

GEZE Perlan 140 on wooden door (Photo: Studio BE)

INTRODUCTION

Sleek technology - highly durable

Sliding door fittings consist of a track and the roller carriage guided within it; the roller carriage moves the leaf connected to it – made of glass, wood and/or metal – or any other elements. The roller-guided sliding door fittings of the Rollan and Perlan range are preferably used for indoor doors. Their particular advantages include their very quiet running and sophisticated design. A comprehensive range of accessories provides solutions for virtually every use. Glass solutions can be implemented, among other things, using the Levolan, Aerolan, Geolan and Vetroslide design fittings.

Sliding door fitting systems for manual wooden and metal doors
GEZE offers all kinds of different fittings solutions for functional and visually attractive sliding door systems, partitions or other moving elements with wooden or metal leaves. These enable considerable design freedom and planning & design flexibility. Sophisticated technologies, high-quality materials and first-class workmanship move the roller carriages precisely, gently and quietly along the track and make the fittings system very strong and durable.

Glass solutions for manual sliding door systems
In modern architecture – for example, in office buildings, but in private housing too – conventional materials are nowadays often replaced by glass. Glass is incorporated as a design element under new prerequisites, functional and technological aspects become increasingly important and fittings are deliberately accentuated, for example, as high-quality design versions, so that the glass/fitting technology mix requires wide variety. GEZE provides diverse visually outstanding and efficient concepts for a fluid, open and transparent ambience.

Overview table for sliding fitting systems

	Rollan 40 N / 80	Perlan 140	Perlan 140 KS	Perlan AUT 2	Perlan AUT-NT	Levolan 60	Levolan 150	Aerolan	Geolan	Vetro-slide
Door weight (max.)	40 / 80 kg	140 kg	140 kg	120 kg	80 kg	60 kg	150 kg	105 kg	135 kg	80 kg
Door material										
Wood	●	●	●	●	●	●	●	●	●	
Plastic	●	●	●	●	●	●				
Metal	●	●	●	●	●	●				
Glass	●	●	●	●	●	●	●	●	●	●
Corrosion protection	Class 1	Class 2	Class 4			Class 3	Class 2	Stainless steel	Stainless steel	Stainless steel
Type of installation										
Wall mounting	●	●	●	●	●	●	●	●	●	
Ceiling mounting	●	●	●	●	●	●	●	●	●	
Glass mounting						●		●		●
Type of door										
Single and multi-leaf	●	●	●	●	●	●	●	●	●	●
Synchronised		●	●	●	●		●	●		
Telescopic		●	●							
Automated		●	●	●	●					
Fixed panel		●	●			●	●	●		
Draw-in damping	●	●				●	●			
max.	40 kg	80 kg				60 kg	80 kg			

● = yes

GEZE Rollan 40 N / Rollan 80

The quiet roller-guided sliding systems for simple sliding concepts

The quiet GEZE Rollan 40 N and Rollan 80 roller-guided sliding door systems enable uncomplicated integration of sliding concepts in indoor spaces. The ceiling and wall fixing supports diverse use, including in passage doors, partition walls and cloakrooms. The level contact surface of the track reduces the noise generated on opening and closing. The track can be uniformly used for Rollan 40 N and Rollan 80 and for any leaf material. This reduces planning and storage costs and therefore enables simple adjustment to changing use circumstances. Equally, the closed version of the track prevents the penetration of dust and dirt. The distance between the door leaf and the track can be easily set or readjusted using the suspension bolt, even when installed.

The complete sets consist of the track with differing length, 2 roller carriages, 2 carrier plates, 2 tube buffers and 1 floor guide. A hold-open spring is also included in the Rollan 80 set.
Alternatively, the track (6 m long or customized length) and the accessories can be ordered separately.

GEZE Rollan 40 N / Rollan 80

GEZE Rollan 40 N / Rollan 80

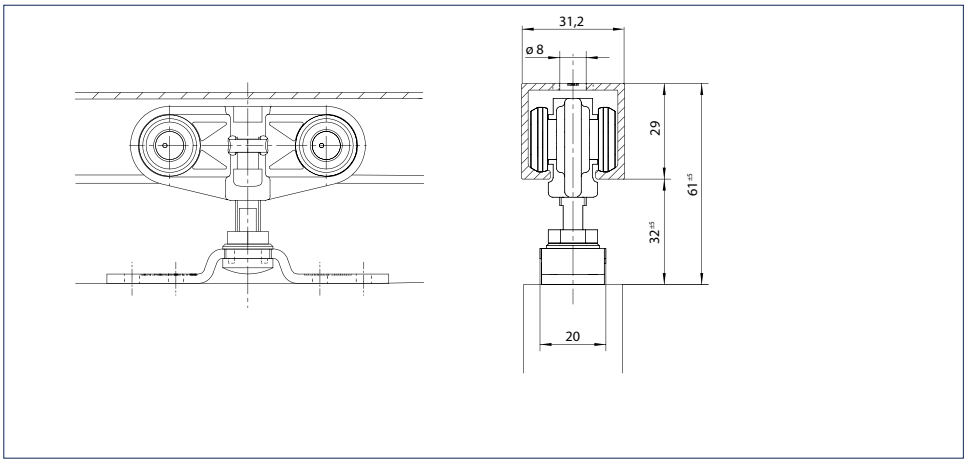

Application range

- For wood, metal and glass doors
- A glass clamping plate is available for glass leaves
- For all single- and multiple-leaf sliding doors
- Quiet running makes it particularly well suited for doors in living and office spaces

Technical data

Product features	GEZE Rollan 40 N / Rollan 80
Door material	Wood, Plastic, Metal, Glass
Leaf weight (max.)	40 kg / 80 kg
Number of leaves	1-leaf, 2-leaf
Test cycles	50000
Corrosion protection class	1
Type of installation	Wall installation, Ceiling installation
Draw-in damping	● max. 40 kg

● = YES

Standard width in mm

Leaf width (FB)	Track length (L)	Hole spacing (t)	Number of wall and ceiling brackets (x)	Distance from end of track to centre of hole of fixing bracket (y)
500 - 590	1150	350	4	50
500 - 840	1650	450	4	150
500 - 920	1800	400	5	100
500 - 970	1900	450	5	50
500 - 1190	2350	450	6	50
500 - 1420	2800	450	7	50
500 - 1640	3250	450	8	50
Standard length (LL)	6100	350	18	50

Standard installation
Drawing No. 10417-ep03

Mounting on a 1-leaf sliding door with wooden leaf and carrier plate:

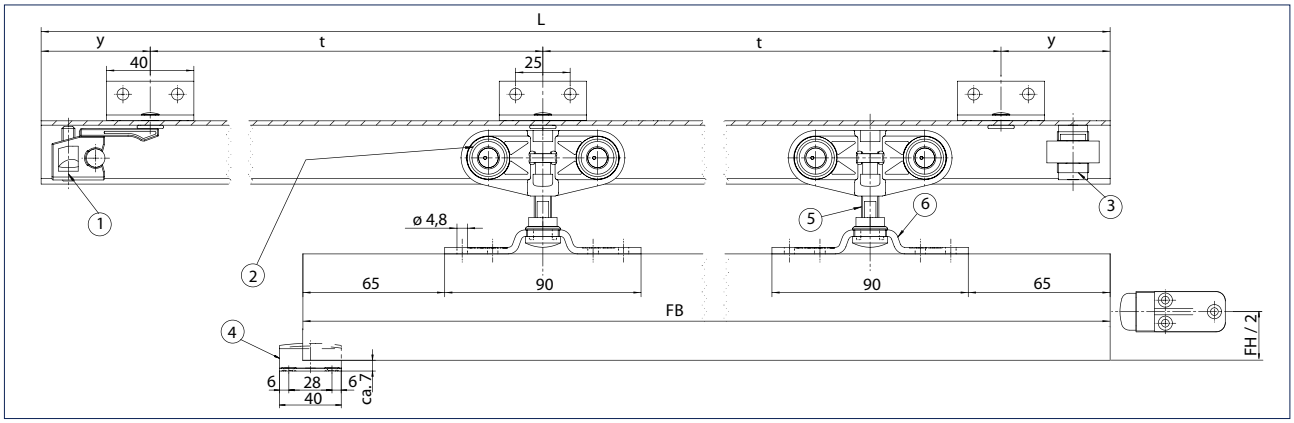

1 = Tube buffer adjustable with hold-open mechanism in the track
2 = Double-roller carriage
3 = Tube buffer adjustable in the track
4 = Floor guide
5 = Suspension bolt Perlan 140
6 = Carrier plate
L = Track length
y = Distance end of track to centre of first drilled hole
t = Hole spacing
FB = Leaf width
FH = Leaf height

The fitting can be fixed directly on the ceiling or fixed to the wall or ceiling using an angle bracket or plate:

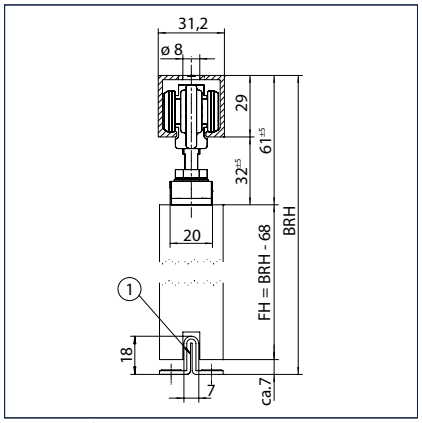

Direct ceiling mounting
1 = Floor guide
FH = Leaf height
BRH = Overall height

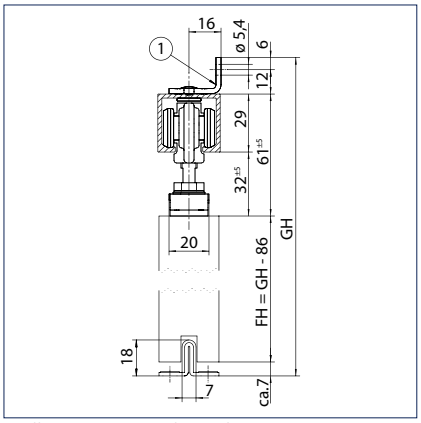

Wall mounting with angle
1 = Wall attachment bracket Perlan 140
FH = Leaf height
GH = Total height

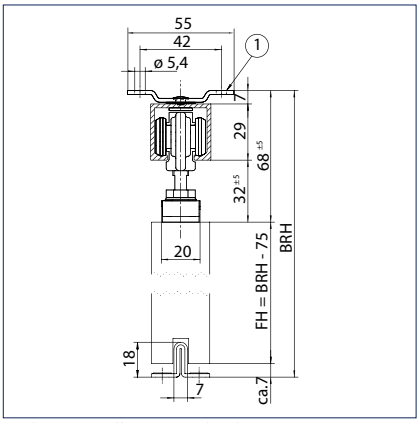

Ceiling installation with plate
1 = Ceiling fixing plate
FH = Leaf height
BRH = Overall height

Classification to EN 1527:1998

GEZE Rollan 40 N								
Category of use	Durability	Door weight	Fire resistance	Safety	Corrosion resistance	Security	Category of door	Initial friction
-	5	1	0	-	1	-	1	3

A DESCRIPTION OF THE CLASSES IS GIVEN AT THE END OF THE CATALOGUE.

Classification to EN 1527:1998

GEZE Rollan 80								
Category of use	Durability	Door weight	Fire resistance	Safety	Corrosion resistance	Security	Category of door	Initial friction
-	5	2	0	-	1	-	1	3

A DESCRIPTION OF THE CLASSES IS GIVEN AT THE END OF THE CATALOGUE.

GEZE Rollan 40 N / Rollan 80 - Order information

Description	Leaf width from - to	Length	ID.No.
GEZE Rollan 40 N complete set Set for wall and ceiling installation with wooden leaf standard, up to 40 kg leaf weight	500 mm 590 mm	1150 mm	120162
	500 mm 840 mm	1650 mm	120163
	500 mm 920 mm	1800 mm	120164
	500 mm 970 mm	1900 mm	120165
	500 mm 1190 mm	2350 mm	120166
	500 mm 1420 mm	2800 mm	120167

Description	Leaf width from - to	Length	ID.No.
GEZE Rollan 80 complete set Set for wall and ceiling installation with wooden leaf standard, up to 80 kg leaf weight	500 mm 840 mm	1650 mm	120170
	500 mm 920 mm	1800 mm	120171
	500 mm 970 mm	1900 mm	120172
	500 mm 1190 mm	2350 mm	120173
	500 mm 1420 mm	2800 mm	120174
	500 mm 1640 mm	3250 mm	120175
GEZE Rollan 80 complete set Set for wall and ceiling installation with glass leaf, glass clamping plate individually covered EV1, up to 80 kg leaf weight	500 mm 970 mm	1900 mm	135071
Accessories			
Rollan 40 N/80 track		6000 mm	120150
Rollan 40 N/80 track Cut to size, per m			120151
Rollan 40 N/80 carrier plate Without suspension bolt and attachment material			026654
Concealed carrier plate set 2 pcs., for milling into the wooden leaf, including suspension bolts and flat open-ended spanner for height adjustment			138015
Rollan 40 N/80 wall attachment bracket Without attachment material			125858
Ceiling fixing plate Without attachment material			069991
Rollan 80 double roller carriage without suspension bolt Dark grey, up to 80 kg leaf weight			069539
Rollan 40 N double roller carriage with suspension bolt Light grey, up to 40 kg leaf weight			055779
Rollan 40 N double roller carriage without suspension bolt Light grey, up to 40 kg leaf weight			069541
Rollan 80 double roller carriage with suspension bolt Dark grey, up to 80 kg leaf weighte			055778
Adjustable glass floor guide Variable adjustment for glass thickness 8-13,5 mm, with silencing guide with structured glass surfaces, without attachment material			120417
Frieze band for adjustable glass floor guide for use with structured glass or rough surface			143869
Stainless steel floor guide For 8, 10, 12 mm glass			134990
Floor guide wood standard Without attachment material			002191
Door pull handle, configured			127616
Flush pull, 8-12 mm glass Closed, outer diameter 60 mm, glass drill hole 40 mm			138670
Flush pull, 8-12 mm glass Open, outer diameter 70 mm, glass drill hole 60 mm, specify glass thickness when ordering			127617
Flush pull, 15-80 mm wood Outer diameter 60 mm, specify leaf thickness when ordering			127614
Angle buffer			000339
Rollan 40 N/80 tube buffer with hold-open spring, retention force can be adjusted gradually in installed state NEW: NOW ADJUSTABLE			120161
Rollan 40 N/80 tube buffer without hold-open spring			120192

GEZE SLIDING DOOR SYSTEMS

Description	Leaf width from - to	Length	ID.No.
Rollan 40 N/80 suspension bolt with nut			038183
Adjustable hold-open mechanism			069272
Accessory set basic components Rollan 40 N for ceiling mounting, comprising: 2 x double-roller carriage, 2 x tube buffer, 2 x carrier plate, 2 x suspension bolt, 1 x floor guide wood	500 mm 1420 mm		120306
Accessory set basic components Rollan 40 N for wall assembly, consisting of: 2 x double-roller carriage, 2 x tube buffer, 2 x carrier plate, 2 x suspension bolt, 1 x floor guide wood, incl. standard wall bracket (length = usable up to track length)	500 mm 970 mm	1900 mm	120307
	500 mm 1420 mm	2800 mm	120308
Accessories set basic components Rollan 80 for ceiling mounting, comprising: 2 x double-roller carriage, 2 x tube buffer (1 x with hold-open device), 2 x carrier plate, 2 x suspension bolt, 1 x floor guide wood	500 mm 1420 mm		120176
Accessories set basic components Rollan 80 for wall assembly, comprising: 2 x double-roller carriage, 2 x tube buffer (1 x with hold-open device), 2 x carrier plate, 2 x suspension bolt, 1 x floor guide wood, incl. standard wall bracket (length = usable up to track length)	500 mm 970 mm	1900 mm	120177
	500 mm 1420 mm	2800 mm	120178

GEZE Rollan (Photo: Studio BE)

GEZE Rollan 40 N SoftStop

Gentle closing with anti-trap protection

GEZE sliding door systems with Rollan 40 N SoftStop draw-in damping perfectly combine comfort, convenience and safety for sliding doors. Uncontrolled stopping at the frame or the buffer is now a thing of the past. The door is braked gently and automatically returns to the zero position. The gentle draw-in to the end position is easy on the door and the fitting and increases the door's life.
With a total height of only 29 mm, Rollan 40 N SoftStop is completely concealed in the track. The draw-in damping also acts as anti-trapment device, as the door's movement is braked over the last centimetres of closing. The GEZE Rollan 40 N SoftStop draw-in damping is available as a standard feature for leaf widths between 545-1700 mm.

The set contains a Rollan 40 N SoftStop roller carriage for one or double-sided damping. The standard set also includes 1 or 2 carrier hooks including fixing screws, 2 x track buffers, 2 x suspension bolts as well as 2 x carrier plates.

GEZE Rollan 40 N SoftStop

GEZE Rollan 40 N SoftStop

Application range

- For wood, plastic, glass and metal leaves up to 40 kg leaf weight
- A glass clamping plate is available for glass leaves
- For all single- and multiple-leaf sliding doors
- Damped on one or both sides
- Particularly well suited for doors in living and office spaces

Technical data

Product features	GEZE Rollan 40 N SoftStop
Door material	Wood, Plastic, Metal, Glass
Leaf weight (max.)	40 kg
Number of leaves	1-leaf, 2-leaf
Test cycles	100000
Type of installation	Wall installation, Ceiling installation
Draw-in damping	●

● = YES

SoftStop draw-in damping
Drawing No. 10417-ep06

For example, with wooden leaves, 2-sided, medium, damping in both directions:

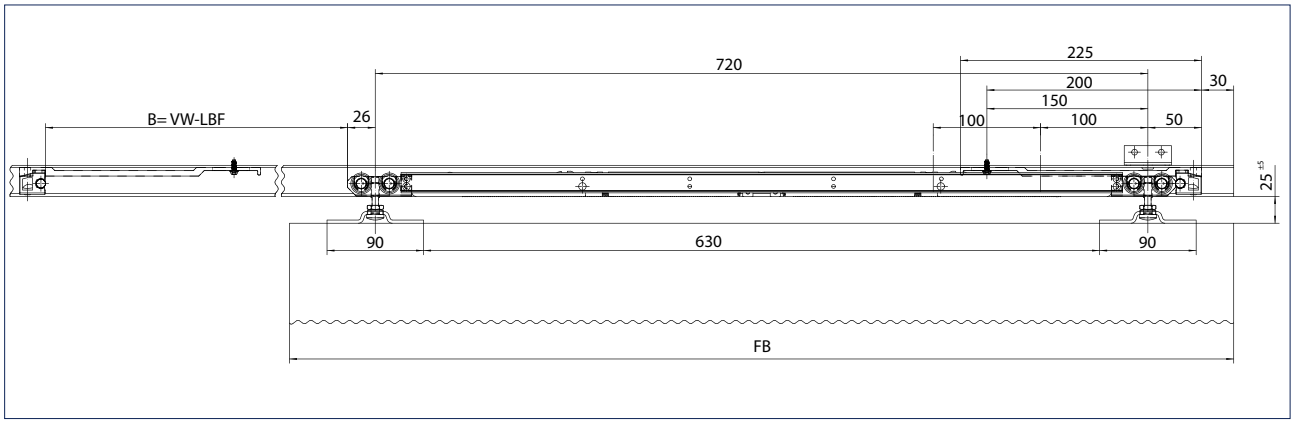

VW = Range of movement
LBF = Length of floor guide
FB = Recommended leaf width 880 - 1270 mm

For example, with wooden leaves, carrier plate lowered, 1-sided, short, damping in one direction:

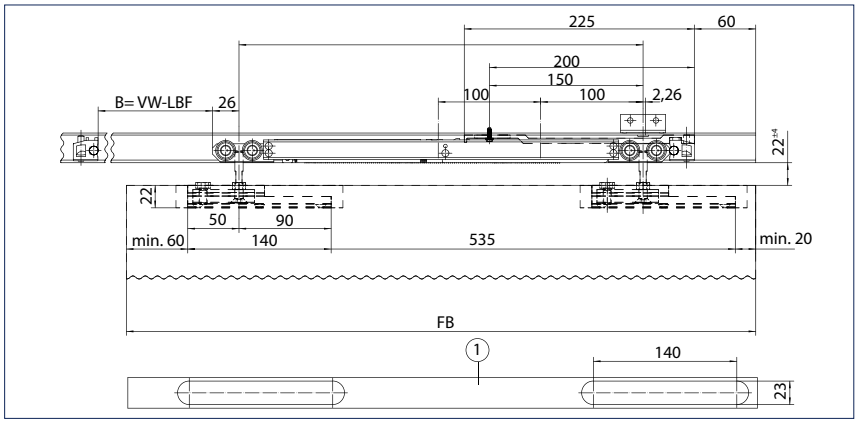

VW = Range of movement
LBF = Length of floor guide
FB = Recommended leaf width see below
kurz = 650 - 940 mm
mittel = 940 - 1330 mm
lang = 1330 - 1700 mm
1 = min. recess for wooden leaf

For example, with glass leaves (glass with edge recesses), 1-sided, short, damping in one direction:

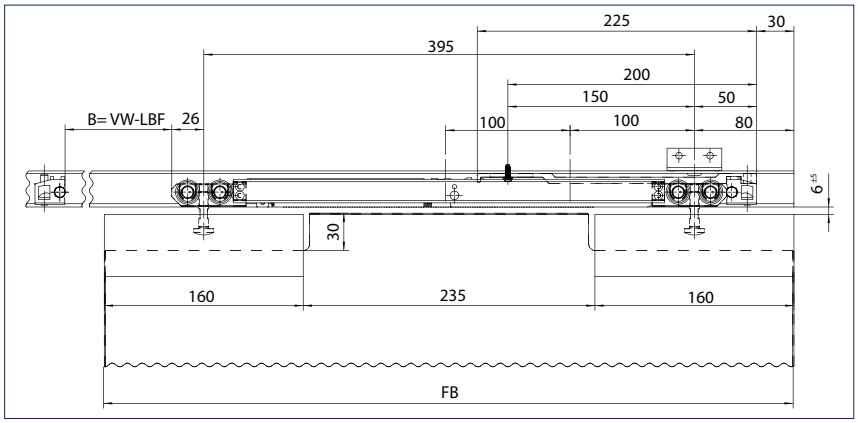

VW = Range of movement
LBF = Length of floor guide
FB = Recommended leaf width 550 - 880 mm

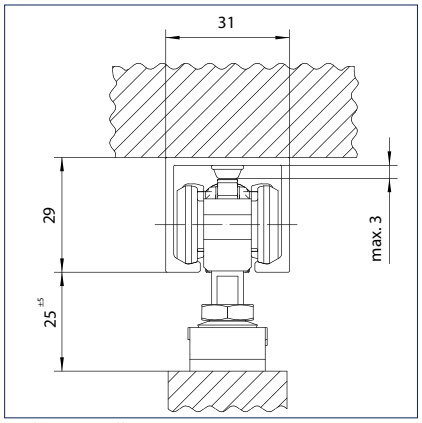

Ceiling installation

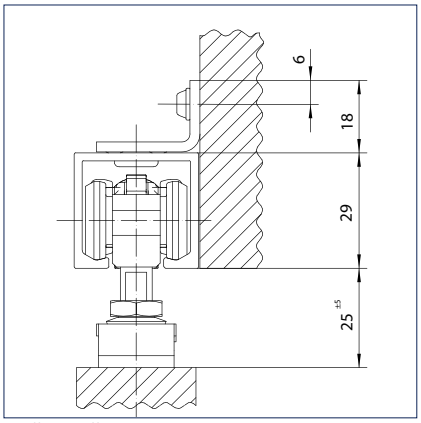

Wall installation

GEZE Rollan 40 N SoftStop - Order information

Description	Leaf width from - to	ID.No.
Rollan 40 N SoftStop set, medium version, damped on both sides, up to 40 kg The set includes: 1 x roller carriage with damping unit on both sides, 2 x buffers, 2 x drivers with attachment screws, 2 x standard carrier plates	880 mm 1270 mm	129902
Rollan 40 N SoftStop set, short version, damped on one side, up to 40 kg The set includes: 1 x roller carriage with damping unit on one side, 2 x buffers, 1 x driver with attachment screw, 2 x standard carrier plates	555 mm 880 mm	129899
Rollan 40 N SoftStop set, medium version, damped on one side, up to 40 kg The set includes: 1 x roller carriage with damping unit on one side, 2 x buffers, 1 x driver with attachment screw, 2 x standard carrier plates	880 mm 1270 mm	129900

GEZE glass clamping plate 45 mm

Inconspicuous and easy to install

The GEZE glass clamping plate offers increased mounting convenience without the need for time-consuming glass work. The individual clamping platees can be covered or both patches can be concealed with a continuous cover. By completely covering the carrier plates, the visual effect is that of a continuous clamping plate, which is also available in all RAL colours. The gap between the clamping plate and track is hardly visible and there is no need to fit a cover on site. The glass clamping plate can be used for all standard glass thicknesses. The clamping plate can be set to the respective glass thickness using the inside gearing. This considerably facilitates installation and dismantling.

GEZE glass clamping plate 45 mm

GEZE glass clamping plate 45 mm

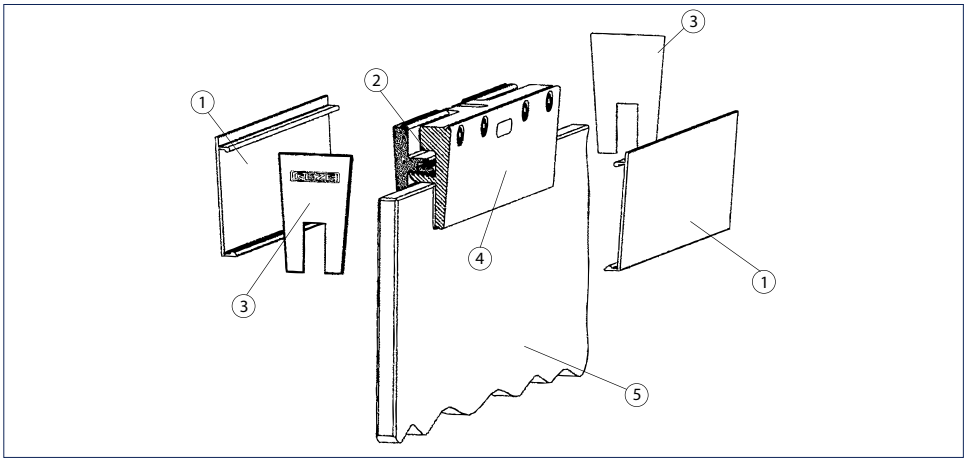

1 = Cover profile
2 = Inside gearing
3 = End cover
4 = Glass clamping plate
5 = Glass pane

Application range

- For all GEZE sliding systems
- For ESG (toughened safety glass) 8, 10, 12 mm as well as laminated safety glass up to 12.76 mm with additional laminated safety glass adhesive kit (without glass preparation) and wooden leaf
- For leaf weights up to 140 kg (Rollan up to 80 kg)

Technical data

Product features	GEZE glass clamping plate 45 mm
Door material	Glass
Automated	●
Fixed panel	●
Draw-in damping	●

● = YES

Standard installation of Rollan 40 N / 80 on glass leaves
Drawing No. 10417-ep04

Note
The wall recesses must be made accessible by a removable fascia. The door leaf must be stopped by a further angle buffer – in addition to the tube buffer. The buffer must be attached at the mid door height!

Mounting on a 1-leaf sliding door with glass leaf and glass clamping plate:

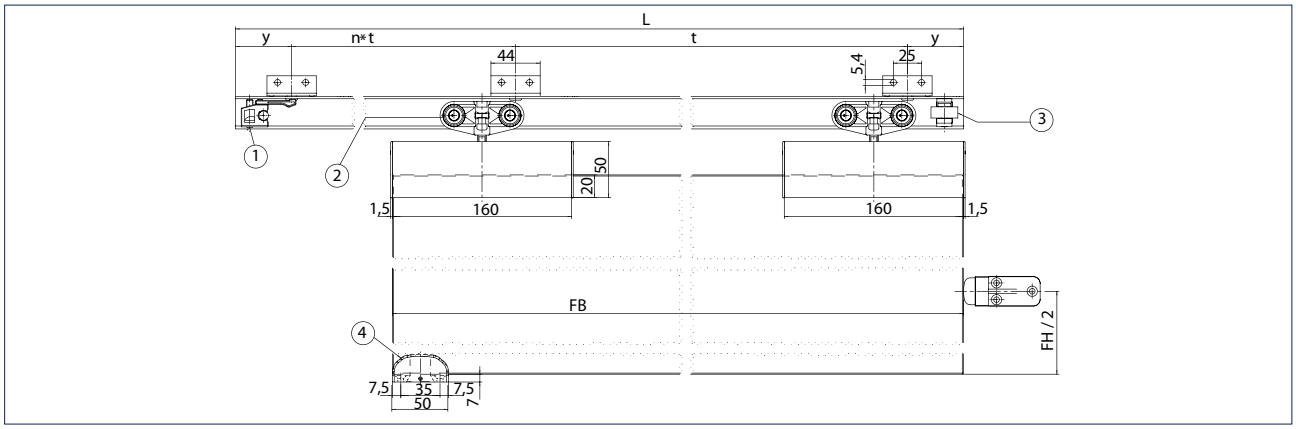

1 = Tube buffer adjustable with hold-open mechanism in the track
2 = Double-roller carriage
3 = Tube buffer adjustable in the track
4 = Infinitely adjustable glass floor guide
L = Track length
y = Distance end of track to centre of first drilled hole
n = Installation of individual wall brackets with wooden leaf
t = Hole spacing
FB = Leaf width
FH = Leaf height

Can be fixed directly or with a plate on the ceiling or a bracket on the wall:

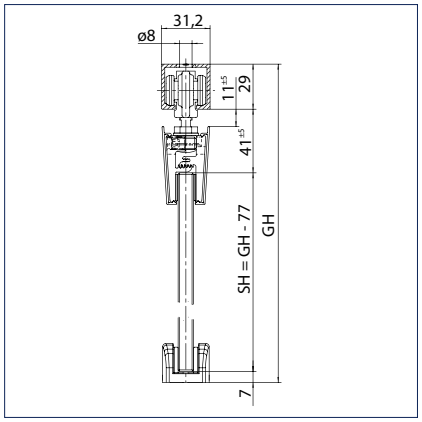

Direct ceiling mounting
SH = Panel height
GH = Total height

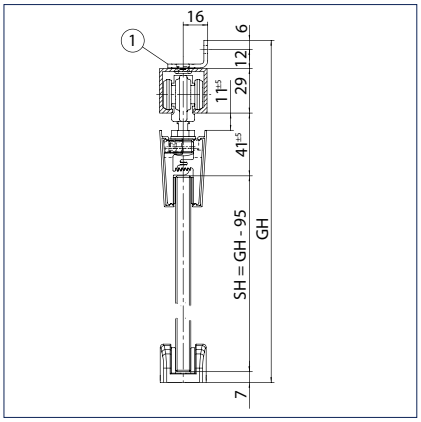

Wall mounting with angle
1 = Wall installation
SH = Panel height
GH = Total height

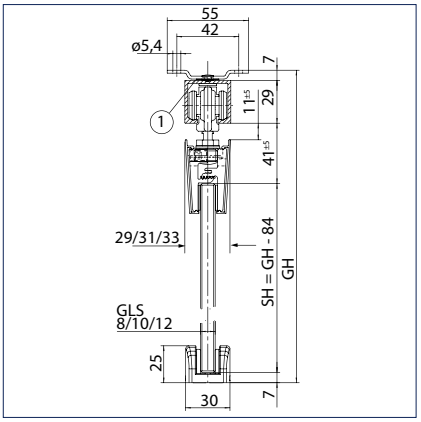

Ceiling installation with plate
1 = Ceiling fixing plate
GLS = Thickness of glass
SH = Panel height
GH = Total height

Stainless steel floor guide version

Adjustable glass floor guide EV1 (Photo: Studio BE)

GEZE glass clamping plate 45 mm - Order information

Description	Length	Version	ID.No.
Glass clamping plate 45 mm set, without cover Comprising 2 x glass clamping plates inc. suspension bolts, up to 140 kg leaf weight, for 8-12 mm ESG			125586
Glass clamping plate 45 mm set, individually covered Comprising 2 x glass clamping plates inc. suspension bolts, individual cover profiles and end covers, up to 140 kg leaf weight, for 8-12 mm ESG		EV1	125585
		stainless steel colour	134986
		acc. to RAL	126216
Glass clamping plate 45 mm set, continuously covered Comprising 2 x glass clamping plates inc. suspension bolts, continuous bespoke cover and end covers, EV1 or stainless steel colour, up to 140 kg leaf weight, for 8-12 mm ESG			125588
Accessories			
Cover profile glass clamping plate 45 mm For continuous cover, 1 profile	3000 mm	EV1	126107
	3000 mm	stainless steel colour	135034
Cover profile glass clamping plate 45 mm For continuous cover, bespoke		EV1	127628
		stainless steel colour	135033
		acc. to RAL	126108
Set of end pieces for glass clamping plate 45 mm 2 x end pieces for mounting on the outside of the leaf for attachment of the continuous cover and side caps			133740
Set of end covers for glass clamping plate 45 mm for 2 glass clamping plates		EV1	137359
		black	125582
		stainless steel colour	137360
		acc. to RAL	127498
Clamping insert glass clamping plate 45 mm and Levolan 150 for 2 glass clamping plates, for use with 12.7 mm (1/2 inch) ESG			133022
Set VSG glued fixing for use with VSG glass in connection with glass clamping plate 45 mm and Levolan 150, for 2 clamping plates, WITHOUT adhesive			133099
Glass/metal bonding set 5x1 g for up to 5 doors			133056
Glass/metal bonding set 50 g for up to 30 doors			133039

GEZE glass clamping plate 30 mm

Inconspicuous and easy to install

The small glass clamping plate enables minimum installation height for maximum use options. Doors up to 80 kg are securely clamped without glass preparation or gluing. Due to an overall height of only 30 millimetres, the glass clamping plate is not visible when installed in a standard wall recess. Its length of only 110 mm enables diverse use for almost all door widths. It can be used in conjunction with the GEZE's manual sliding systems Rollan 40N/80 and Perlan SoftStop, and with Perlan AUT/Perlan AUT-NT. The glass clamping plate for Perlan AUT/Perlan AUT-NT fits concealed under the clip-on cover 100. The result is a complete system for automated glass doors. The simple installation using clamping plates makes all glass preparation work superfluous. All the usual types of glass can be covered (ESG 8, 10, 12 millimetres and VSG up to 12.76 millimetres with an additional VSG kit). Individual design options due to the possibility of covering each of the individual panels, or continuous covering across both panels.

GEZE glass clamping plate 30 mm

Application range

- For all GEZE sliding systems
- For ESG (toughened safety glass) 8, 10, 12 mm as well as laminated safety glass up to 12.76 mm with additional laminated safety glass adhesive kit (without glass preparation) and wooden leaf
- For leaf weights up to 80 kg

Technical data

Product features	GEZE glass clamping plate 30 mm
Door material	Glass
Automated	●
Fixed panel	●
Draw-in damping	●

● = YES

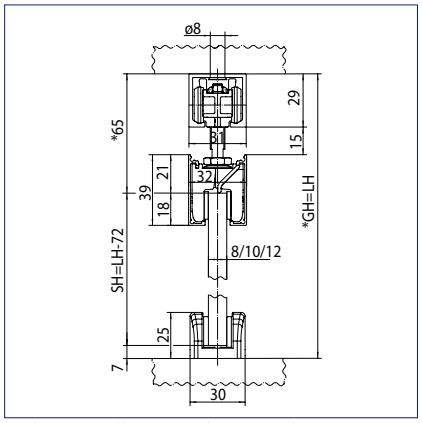

Ceiling installation without angle
GH = Total height
LH = Clear height
SH = Panel height
* = optional with suspension bolt

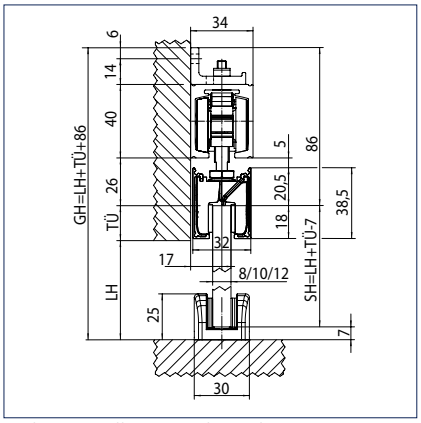

Ceiling installation with angle
GH = Total height
LH = Clear height
SH = Panel height
TÜ = Door protrusion
* = optional with suspension bolt

GEZE glass clamping plate 30 mm - Order information

Description	Length	Version	ID.No.
Glass clamping plate 30 mm set, continuously covered Comprising 2 x glass clamping plates inc. suspension bolts, continual bespoke cover and end covers, EV1 or stainless steel colour, up to 80 kg leaf weight, for 8-12 mm ESG			142368
Glass clamping plate 30 mm set, individually covered Comprising 2 x glass clamping plates inc. suspension bolts, individual cover profiles and end covers, up to 80kg leaf weight, for 8-12 mm ESG		EV1	142365
		stainless steel colour	142366
		acc. to RAL	142367
Glass clamping plate 30 mm set, without cover Comprising 2 x glass clamping plates inc. suspension bolts, up to 80 kg leaf weight, for 8-12 mm ESG			142364
Accessories			
Cover profile glass clamping plate 30 mm For individual cover of 2 glass clamping plates		EV1	144032
		stainless steel colour	144033
Cover profile glass clamping plate 30 mm For continuous cover, bespoke		EV1	141695
		stainless steel colour	141696
		acc. to RAL	141697
Cover profile glass clamping plate 30 mm For continuous cover, 2 profiles	3000 mm	EV1	142371
	3000 mm	stainless steel colour	142372
Set of end pieces for glass clamping plate 30 mm 2 pcs. end pieces for mounting on the outside of the leaf for attachment of the continual cover and side caps, necessary where the cover projects > 200 mm beyond the glass clamping plate			142373
Set of end covers for glass clamping plate 30 mm for 2 glass clamping plates		EV1	143346
		black	142369
		stainless steel colour	143347
		acc. to RAL	142370
Clamping insert, glass clamping plate 30 mm for 2 glass clamping plates, for use with 12.7 mm (1/2 inch) ESG			142634
Set LSG glued fixing 30 mm glass clamping plate for use with LSG glass in connection with glass clamping plate 30 mm, for 2 clamping plates, WITHOUT adhesive			142386
Glass/metal bonding set 5x1 g for up to 5 doors			133056
Glass/metal bonding set 50 g for up to 30 doors			133039

GEZE Perlan 140

A wide range of applications with individual accessories

The unobtrusive design supports any desired effect and turns the sliding system with its wide range of accessories into a guarantee for elegant and customised solutions. Even heavy doors are child's play to open. The Perlan 140 provides long-term quiet running due to two precision ball bearings per roller carriage, track design and large carrier rollers. The interior, sealed ball bearings provide corrosion protection for slightly humid interiors, making them suitable even for bathroom doors. The track in anodised alloy material reduces abrasion and also provides increased corrosion protection. The profile has no awkward edges, and all the accessory parts run in the rail. Making Perlan 140 just perfect for installation in visible areas. The distance between the leaf and the wall can be adjusted using the wall attachment bracket, which permits the door to be adjusted to individual situations, e.g. for precise installation of the track where masonry is uneven.

There are numerous complete sets available for a wide range of different applications. These always include all the parts necessary for setting up the sliding door: Track in different lengths as well as matching fixing brackets e.g. for wall installation, roller carriages, carrier plates, tube buffers and floor guide. Alternatively, the track (length 6 m or cut to size) and the accessories can be ordered separately. The track is also available in a curved version on request.

GEZE Perlan 140

GEZE Perlan 140

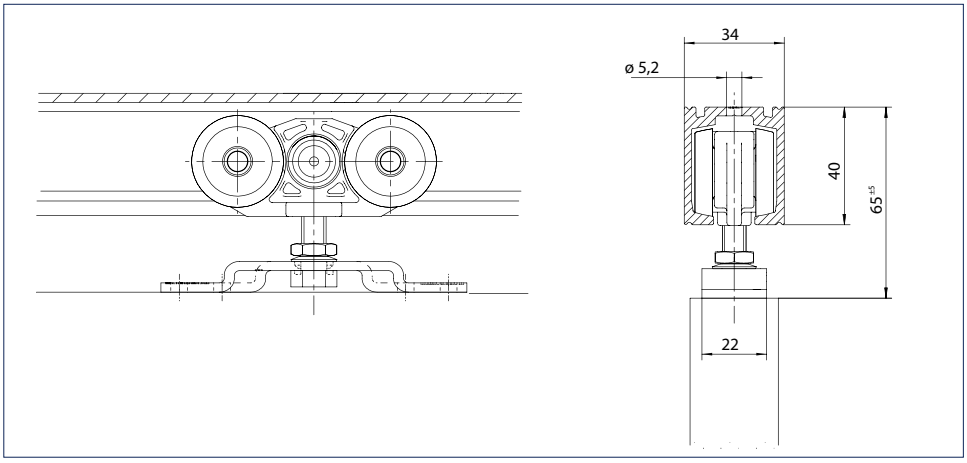

Application range

- For wood, plastic, glass and metal leaves up to 140 kg leaf weight
- Diverse additional parts are available for glass doors, e.g. glass clamping plate, fixed panel holders or GGS holders
- For all single, multi-leaf and synchronous sliding doors
- Straightforward, direct ceiling mounting or mounting using brackets on wall and ceiling
- The smooth running and use of high-quality materials as well as the quality workmanship make it especially suitable for doors in highly frequented residential and office areas

Technical data

Product features	GEZE Perlan 140
Door material	Wood, Plastic, Metal, Glass
Leaf weight (max.)	140 kg
Corrosion protection class	2
Type of installation	Wall installation, Ceiling installation
Telescope	●
Automated	●
Fixed panel	●
Draw-in damping	● max. 80 kg

● = YES

Classification to EN 1527:1998

GEZE Perlan 140								
Category of use	Durability	Door weight	Fire resistance	Safety	Corrosion resistance	Security	Category of door	Initial friction
-	6	3	0	-	2	-	1	3

A DESCRIPTION OF THE CLASSES IS GIVEN AT THE END OF THE CATALOGUE.

Standard width in mm

Leaf width (FB)	Track length (L)	Hole spacing (t)	Number of wall and ceiling brackets (x)	Distance from end of track to centre of hole of fixing bracket (y)
500 - 840	1650	350	5	125
500 - 1040	2050	350	6	150
500 - 1240	2450	350	7	175
500 - 1440	2850	350	9	25
500 - 1640	3250	350	10	50
Standard length	6000	350	18	25

Note

The wall recesses must be made accessible by a removable fascia. The door leaf must be stopped by a further angle buffer – in addition to the tube buffer. The buffer must be attached at the mid door height!

Planning drawings

Drawing No. 10421-pl-01 + 10421-pl-03 (vertical sections)

A = Perlan 140 with glass clamping plate, recessed handle, individually covered without glass cut-outs

B = Perlan 140 with glass clamping plate, recessed handle, individually covered with glass cut-outs

C = Perlan 140 with glass clamping plate, recessed handle, individually covered with glass cut-outs

Note: Position of the glass clamping plate changes if SoftStop used, see planning drawing No. 10421-pl-12.

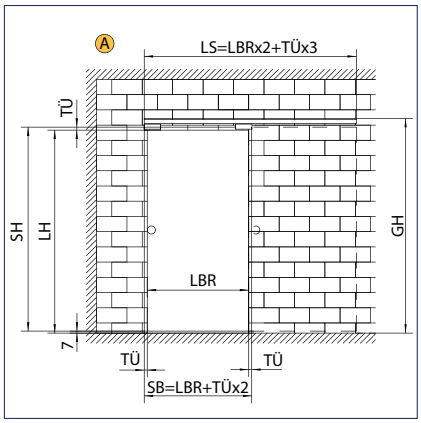

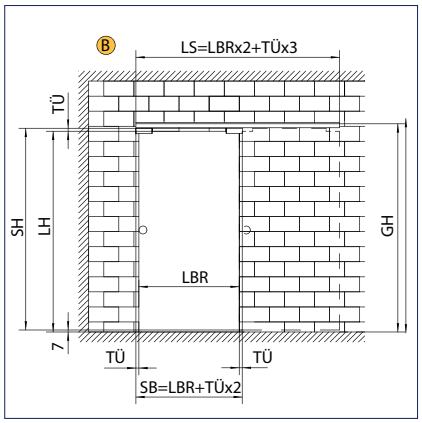

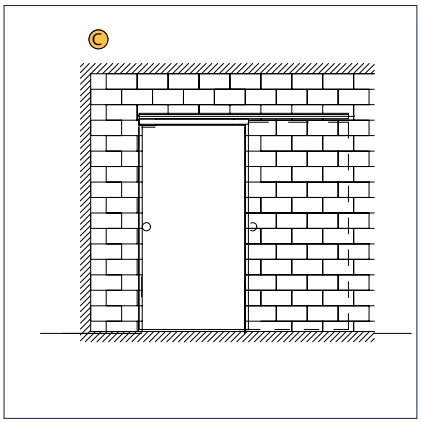

Dimensioning as with A

SH = Panel height
LH = Clear height
LS = Track length
LBR = Clear width
TÜ = Door protrusion
GH = Total height
SB = Panel width
TW1 = Door handle - wall clearance (door closed)
TW2 = Door handle - wall clearance (door opened)
GD = Diameter of handle bar

D = Perlan 140 with glass clamping plate, recessed handle, individually covered, without glass cut-outs, with ceiling connection (not recommended because of glass gap)

E = Perlan 140 with glass clamping plate, with recessed handle, individually covered, with glass cut-outs, with ceiling connection

F = Perlan 140 with glass clamping plate, with recessed handle, continuously covered, without glass cut-outs, with ceiling connection

Note: Position of the glass clamping plate changes if SoftStop used, see planning drawing No. 10421-pl-12.

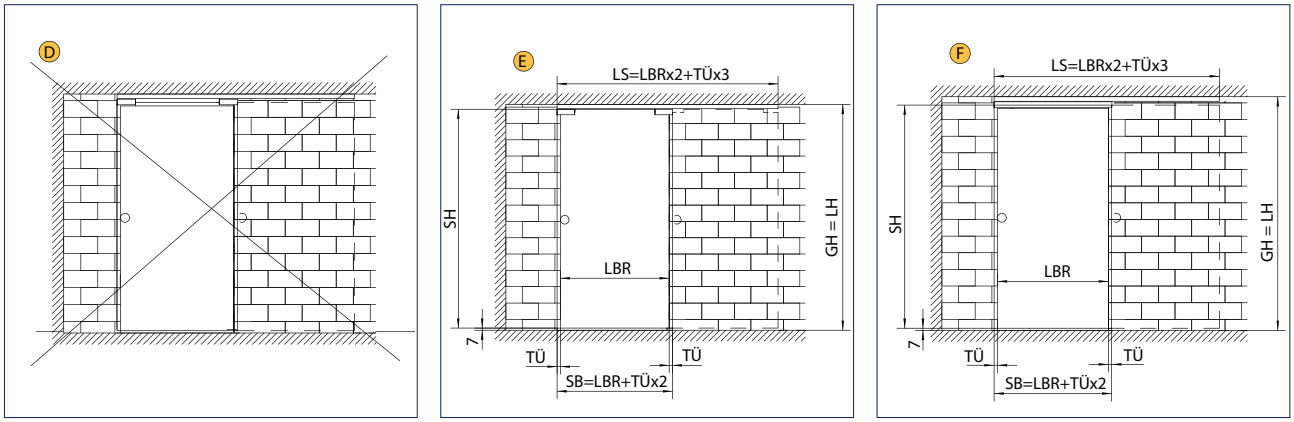

Dimensioning as with F
LS = Track length
LBR = Clear width
TÜ = Door protrusion
SH = Panel height
SB = Panel width
GH = Total height
LH = Clear height

Drawing No. 10421-pl-02 + 10421-pl-03 (vertical sections)

A = Perlan 140 with glass clamping plate, recessed handle, individually covered without glass cut-outs

B = Perlan 140 with glass clamping plate, with pull handle, individually covered, with glass cut-outs

C = Perlan 140 with glass clamping plate, with pull handle, individually covered, with glass cut-outs

Note: Position of the glass clamping plate changes if SoftStop used, see planning drawing No. 10421-pl-13.

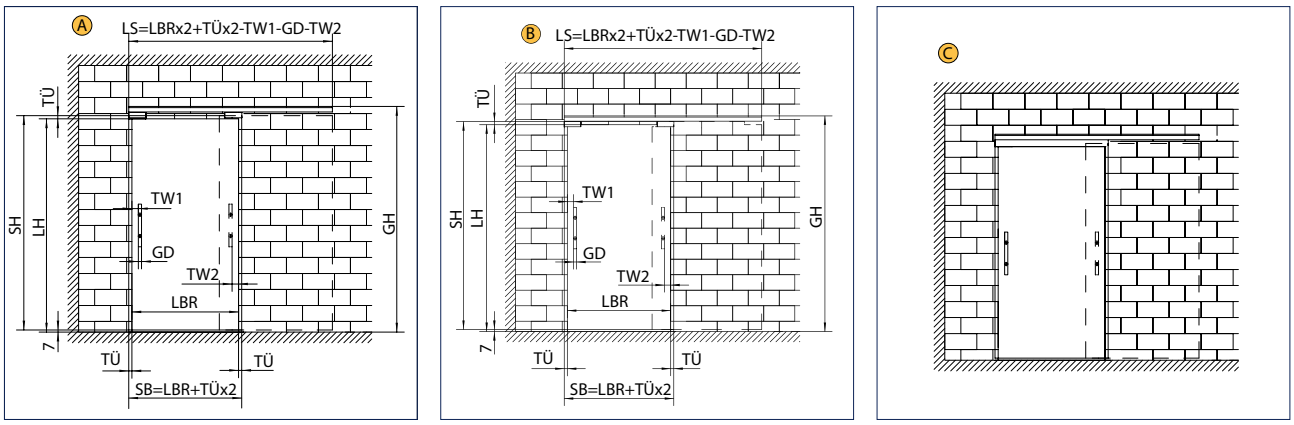

LS = Track length
LBR = Clear width
TÜ = Door protrusion
TW1 = Door handle - wall clearance (door closed)
TW2 = Door handle - wall clearance (door opened)
GD = Diameter of handle bar
SH = Panel height
LH = Clear height
SB = Panel width
GH = Total height

Drawing No. 10421-pl-01 + 10421-pl-03 (vertical sections)

D = Perlan 140 with glass clamping plate, with pull handle, individually covered, without glass cut-outs, with ceiling connection (not recommended because of glass gap)

E = Perlan 140 with glass clamping plate, with pull handle, individually covered, with glass cut-outs, with ceiling connection
F = Perlan 140 with glass clamping plate, with pull handle, continuously covered, without glass cut-outs, with ceiling connection

Note: Position of the glass clamping plate changes if SoftStop used, see planning drawing No. 10421-pl-13.

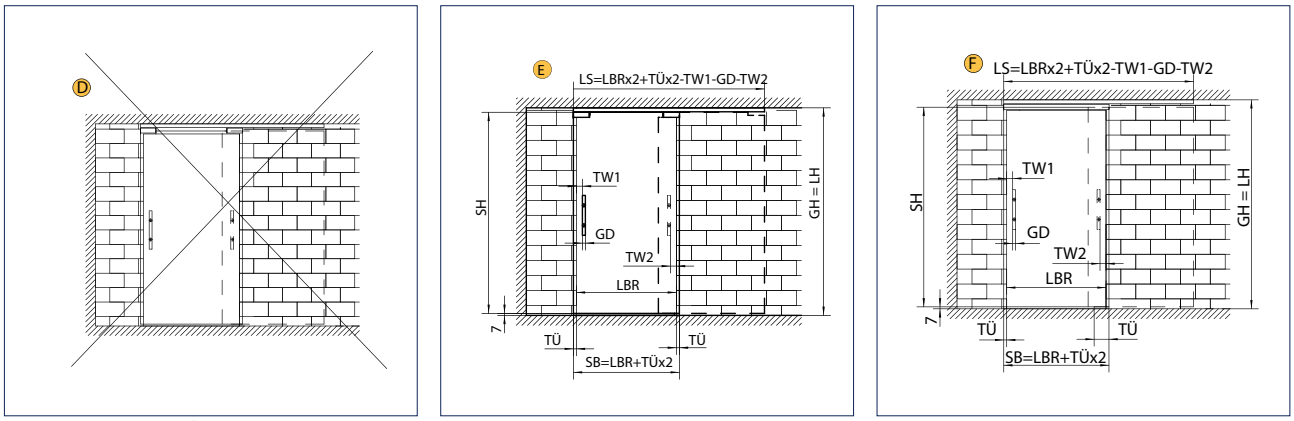

Dimensioning as with F

LS = Track length
LBR = Clear width
TÜ = Door protrusion
TW1 = Door handle - wall clearance (door closed)
TW2 = Door handle - wall clearance (door opened)
GD = Diameter of handle bar
SH = Panel height
LH = Clear height
GH = Total height
SB = Panel width

Standard installation

Drawing No. 10421-ep05

Mounting on a 1-leaf sliding door with wooden leaf and carrier plate (manual):

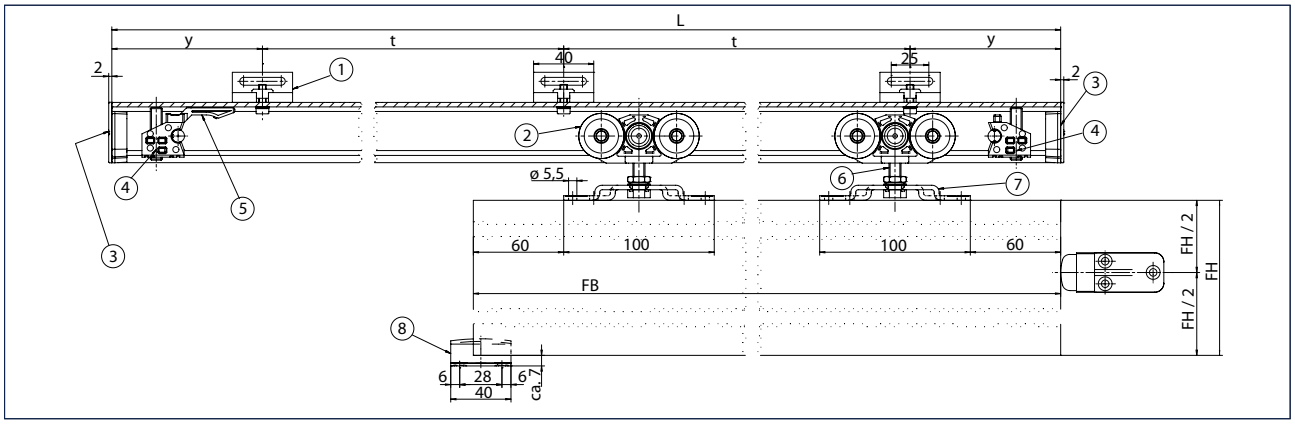

1 = Wall attachment bracket Perlan 140
2 = Double-roller carriage
3 = End cap (optional)
4 = Tube buffer
5 = Hold-open spring
6 = Suspension bolt
7 = Carrier plate
8 = Floor guide
L = Track length
y = Distance end of track to centre of first drilled hole
t = Hole spacing
FB = Leaf width
FH = Leaf height

The fitting can be fixed directly on the ceiling or fixed to the wall or ceiling using an angle bracket or plate:

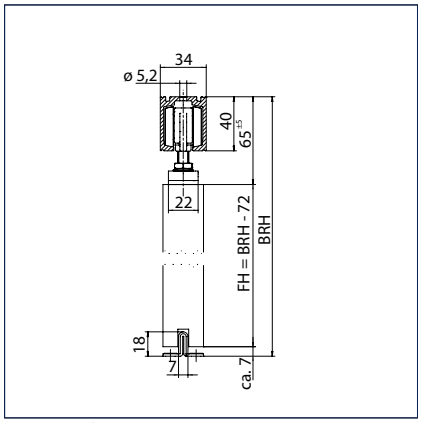

Direct ceiling mounting
FH = Leaf height
BRH = Overall height

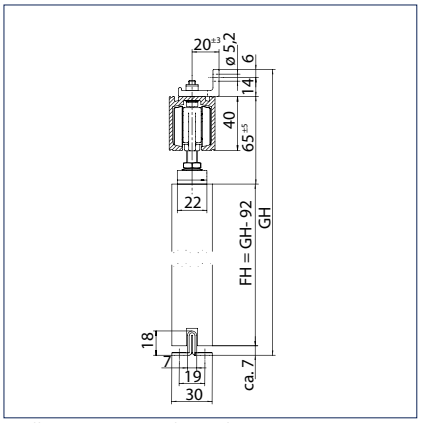

Wall mounting with angle
FH = Leaf height
GH = Total height

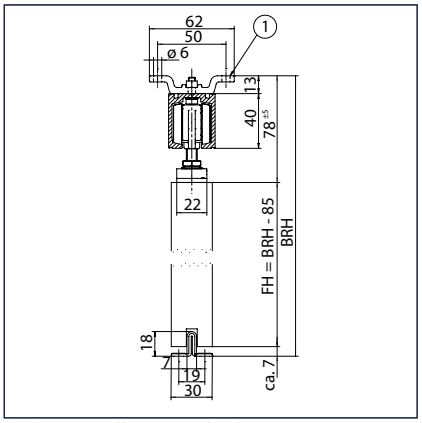

Ceiling installation with plate
FH = Leaf height
BRH = Overall height
1 = Ceiling attachment angle Perlan 140

Installation with lowerable carrier plate
Drawing No. 10421-ep06

Mounting on a 1-leaf sliding door with wooden leaf and lowerable carrier plate:

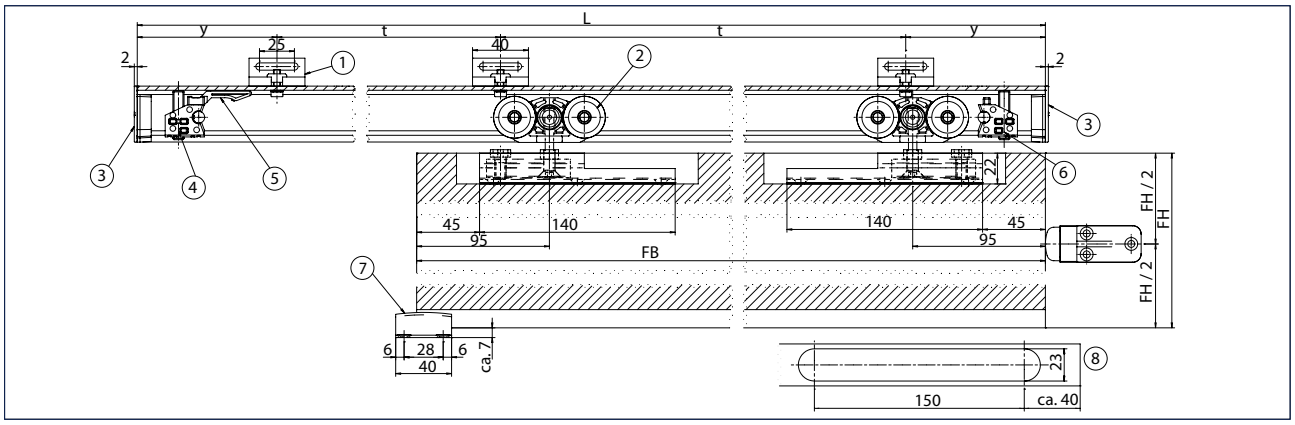

1 = Wall attachment bracket Perlan 140
2 = Double-roller carriage
3 = End cap (optional)
4 = Tube buffer
5 = Hold-open spring
6 = Tube buffer adjustable in the track
7 = Floor guide
8 = min. recess for wooden leaf
L = Track length
y = Distance end of track to centre of first drilled hole
t = Hole spacing
FB = Leaf width
FH = Leaf height

The fitting can be fixed directly on the ceiling or fixed to the wall or ceiling using an angle bracket or plate:

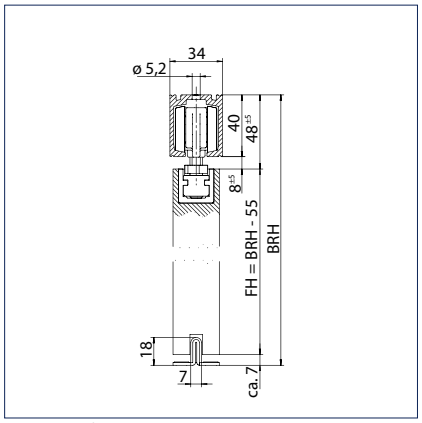

Direct ceiling mounting
FH = Leaf height
BRH = Overall height

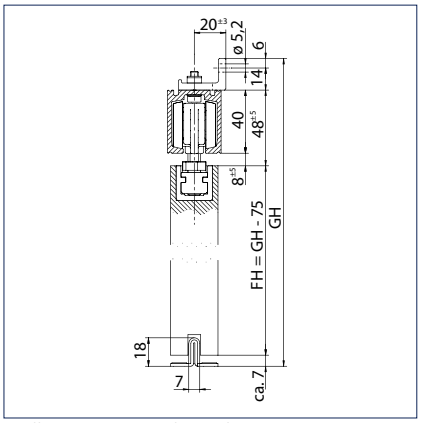

Wall mounting with angle
FH = Leaf height
GH = Total height

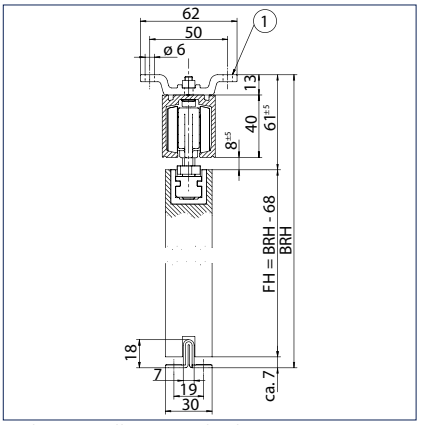

Ceiling installation with plate
FH = Leaf height
BRH = Overall height
1 = Ceiling attachment angle Perlan 140

Concealed carrier plate minimises the distance between rail and door leaf

GEZE Perlan 140 - Order information

Description	Leaf width from - to	Length	Version	ID.No.
Perlan 140 set for wooden leaves For ceiling installation with standard carrier plate, up to 140 kg leaf weight	500 mm 840 mm	1650 mm	EV1	119353
	500 mm 1040 mm	2050 mm	EV1	119354
	500 mm 1240 mm	2450 mm	EV1	119355
	500 mm 1440 mm	2850 mm	EV1	119356
	500 mm 1640 mm	3250 mm	EV1	119357
Perlan 140 set for wooden leaves For wall installation with carrier plate and standard wall attachment bracket, up to 140 kg leaf weight	500 mm 840 mm	1650 mm	EV1	119337
	500 mm 1040 mm	2050 mm	EV1	119338
	500 mm 1240 mm	2450 mm	EV1	119339
	500 mm 1440 mm	2850 mm	EV1	119340
	500 mm 1640 mm	3250 mm	EV1	119351

Description	Leaf width from - to	Length	Version	ID.No.
Perlan 140 set for glass leaves For ceiling installation with glass clamping plate individually covered, up to 140 kg leaf weight	500 mm 840 mm	1650 mm	EV1	134833
	500 mm 1040 mm	2050 mm	EV1	134834
	500 mm 1240 mm	2450 mm	EV1	134835
	500 mm 840 mm	1650 mm	stainless steel colour	134843
	500 mm 1040 mm	2050 mm	stainless steel colour	134844
	500 mm 1240 mm	2450 mm	stainless steel colour	134845
Perlan 140 set for glass leaves For wall installation with concealed wall bracket and glass clamping plate individually covered, up to 140 kg leaf weight	500 mm 840 mm	1650 mm	EV1	134836
	500 mm 1040 mm	2050 mm	EV1	134837
	500 mm 1240 mm	2450 mm	EV1	134839
	500 mm 840 mm	1650 mm	stainless steel colour	134846
	500 mm 1040 mm	2050 mm	stainless steel colour	134847
	500 mm 1240 mm	2450 mm	stainless steel colour	134848
Accessories				
Perlan 140 track with countersunk drill holes (prepared for Perlan SoftStop)	710 mm 900 mm	1650 mm	EV1	135046
	910 mm 1100 mm	2050 mm	EV1	135047
	1110 mm 1300 mm	2450 mm	EV1	135048
		2850 mm	EV1	142518
		3250 mm	EV1	142519
		6000 mm	EV1	128660
	710 mm 900 mm	1650 mm	stainless steel colour	135049
	910 mm 1100 mm	2050 mm	stainless steel colour	135050
	1110 mm 1300 mm	2450 mm	stainless steel colour	135061
		6000 mm	stainless steel colour	128662
Perlan 140 track with countersunk drill holes, custom-made (prepared for Perlan SoftStop)			EV1	128661
			stainless steel colour	128663
Perlan 140 carrier plate Without attachment material				064236
Carrier plate Perlan 140 KS corrosion protection, for use outdoors and in aggressive environments, without attachment material			Stainless steel	117355
concealed carrier plate set 2 pcs., for milling into the wooden leaf, including suspension bolts and flat open-ended spanner for height adjustment				138015
Wall attachment bracket Perlan 140 KS corrosion protection, for use outdoors and in aggressive environments, with sliding block and fixing screw for track				119319

GEZE SLIDING DOOR SYSTEMS

Description	Leaf width from - to	Length	Version	ID.No.
Wall attachment bracket Perlan 140 With sliding block and fixing screw for track				119318
Ceiling attachment angle Perlan 140 With fixing screw for track				119315
Double-roller carriage without suspension bolt up to 140 kg leaf weight				064248
Double-roller carriage Perlan 140 KS without suspension bolt corrosion protection, for use outdoors and in aggressive environments, up to 140 kg leaf weight				117354
Double-roller carriage Perlan 140 KS with suspension bolt corrosion protection, for use outdoors and in aggressive environments, up to 140 kg leaf weight				120087
Double roller carriage with suspension bolt up to 140 kg leaf weight				064346
Adjustable glass floor guide Variable adjustment for glass thickness 8-13,5 mm, with silencing guide with structured glass surfaces, without attachment material			silver-coloured	120417
Frieze band for adjustable glass floor guide for use with structured glass or rough surface				143869
Stainless steel floor guide For 8, 10, 12 mm glass			stainless steel	134990
Floor guide wood standard Without attachment material			galvanised	002191
Door pull handle, configured			stainless steel	127616
Flush pull, 8-12 mm glass Closed, outer diameter 60 mm, glass drill hole 40 mm			stainless steel	138670
Flush pull, 8-12 mm glass Open, outer diameter 70 mm, glass drill hole 60 mm, specify glass thick- ness when ordering			stainless steel	127617
Flush pull, 15-80 mm wood Outer diameter 60 mm, specify leaf thickness when ordering			stainless steel	127614
Angle buffer				000339
Buffer for continuous floor guide				124655
Buffer for continuous glass floor guide				124656
Tube buffer Perlan 140 (also KS) Steel parts made of stainless steel				119362
Perlan track end cap			black	119649
Suspension bolt Perlan 140 With combination nut				063839
Suspension bolt Perlan 140 KS With combination nut			stainless steel	117357
Adjustable hold-open mechanism				069274
Hold-open spring				064242
Accessory set basic components Perlan 140 KS corrosion protection for outdoor use, for ceiling mounting, comprising: 2 x double-roller carriage, 2 x tube buffer, 2 x carrier plate, 1 x hold-open spring, 2 x suspension bolt, 2 x end cap	500 mm 1640 mm			119510
Accessory set basic components Perlan 140 KS corrosion protection for outdoor use, for wall assembly, comprising: 2 x double-roller carriage, 2 x tube buffer, 2 x carrier plate, 1 x hold-open spring, 2 x suspension bolt, 2 x end cap, incl. standard wall bracket (length = usable up to track length)	500 mm 840 mm	1650 mm		119507
	500 mm 1240 mm	2450 mm		119508
	500 mm 1640 mm	3250 mm		119509

Description	Leaf width from - to	Length	Version	ID.No.
Accessory set basic components Perlan 140 for wall assembly, comprising: 2 x double-roller carriage, 2 x tube buffer, 2 x carrier plate, 1 x hold-open spring, 2 x suspension bolt, 2 x end cap, 1 x floor guide wood, incl. standard wall bracket (length = usable up to track length)	500 mm 840 mm	1650 mm		119358
	500 mm 1240 mm	2450 mm		119359
	500 mm 1640 mm	3250 mm		119360
Accessory set basic components Perlan 140 for ceiling mounting, comprising: 2 x double-roller carriage, 2 x tube buffer, 2 x carrier plate, 1 x hold-open spring, 2 x suspension bolt, 2 x end cap, 1 x floor guide wood	500 mm 1640 mm			119361
Ceiling compensation set/ceiling spacer, stepless 6 pcs., continuously variable height compensation from 13 mm to 18 mm. For ceiling mounting using clip-on cover 100/145 as well as for general use on uneven ceilings				138099

GEZE Perlan 140 (Photo: Dirk Wilhelmy)

GEZE Perlan 140 accessories

Infinitely adjustable glass floor guide
The floor guide is suitable for glass thicknesses between 8 mm and 12 mm and can be simply and precisely infinitely adjusted.

Adjustable hold-open mechanism
A headless screw is used for individual catch force setting of the hold-open mechanism. This means individual adaptation to the door leaf used (depending on door weight) and respective door user is possible.

End cap
The push-on end cap gives the track a clean end.

Concealed carrier plate
The distance between the rail and the door leaf is minimised by the suspension being concealed in the wooden leaf. Visible carrier plates are a thing of the past, and on-site wooden cover panels are no longer required.

Stainless steel floor guide version

Adjustable glass floor guide EV1

Adjustable hold-open mechanism

End cap

Ceiling compensation set/ceiling spacer, stepless

Drawing No. 10421-ep06

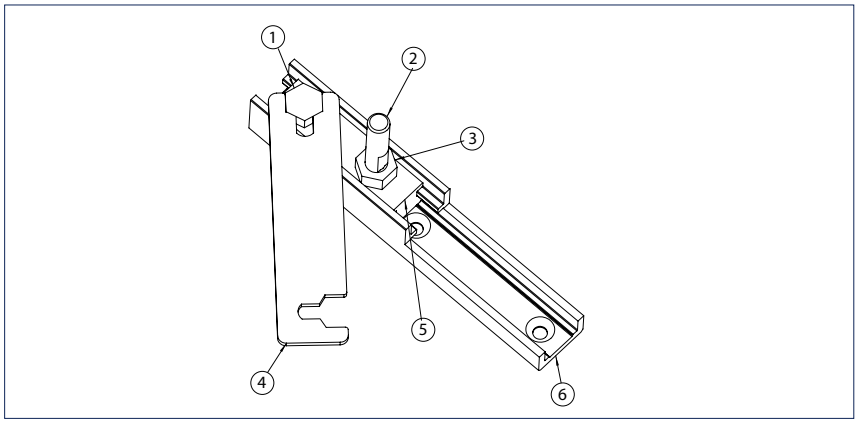

Concealed carrier plate
1 = Hexagon screw, DIN 933 M8x16
2 = Countersunk screw M8x50 with open ended spanner size 6
3 = Hexagon nut DIN 934 M8
4 = Open-ended spanner, SV 6/13
5 = Carrier plate slide
6 = Carrier plate rail

Order information

Description	Version	ID.No.
concealed carrier plate set 2 pcs., for milling into the wooden leaf, including suspension bolts and flat open-ended spanner for height adjustment		138015
Perlan track end cap	black	119649
Adjustable hold-open mechanism		069274
Hold-open spring		064242

GEZE glass clamping plate 45 mm

Inconspicuous and easy to install

The GEZE glass clamping plate offers increased mounting convenience without the need for time-consuming glass work. The individual clamping platees can be covered or both patches can be concealed with a continuous cover. By completely covering the carrier plates, the visual effect is that of a continuous clamping plate, which is also available in all RAL colours. The gap between the clamping plate and track is hardly visible and there is no need to fit a cover on site. The glass clamping plate can be used for all standard glass thicknesses. The clamping plate can be set to the respective glass thickness using the inside gearing. This facilitates installation and dismantling considerably.

GEZE glass clamping plate 45 mm

GEZE glass clamping plate 45 mm

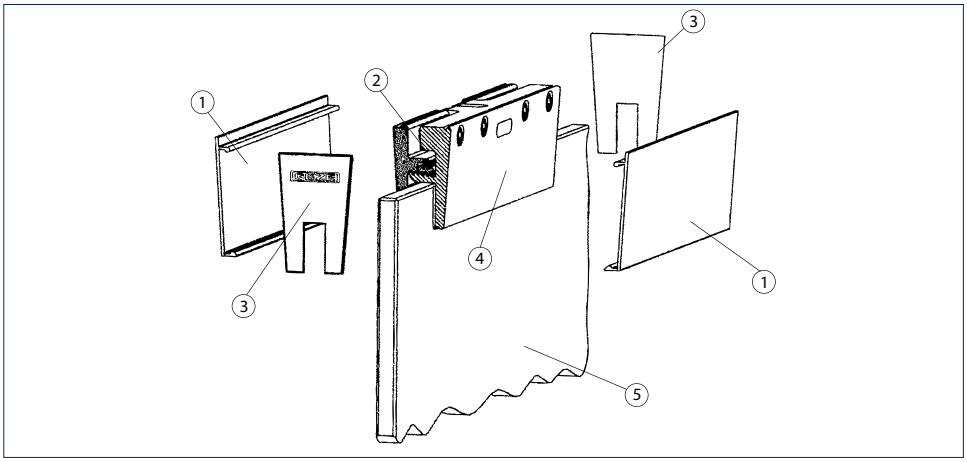

1 = Cover profile
2 = Inside gearing
3 = End cover
4 = Glass clamping plate
5 = Glass pane

Application range

- For all GEZE sliding systems
- For ESG (toughened safety glass) 8, 10, 12 mm as well as laminated safety glass up to 12.76 mm with additional laminated safety glass adhesive kit (without glass preparation) and wooden leaf
- For leaf weights up to 140 kg (Rollan up to 80 kg)

Technical data

Product features	GEZE glass clamping plate 45 mm
Door material	Glass
Automated	●
Fixed panel	●
Draw-in damping	●

● = YES

Standard installation of Perlan 140 on glass leaves

Drawing No. 10421-ep07

Note

The wall recesses must be made accessible by a removable fascia. The door leaf must be stopped by a further angle buffer – in addition to the tube buffer. The buffer must be attached at the mid door height!

Mounting on a 1-leaf sliding door with glass leaf and carrier plate (manual):

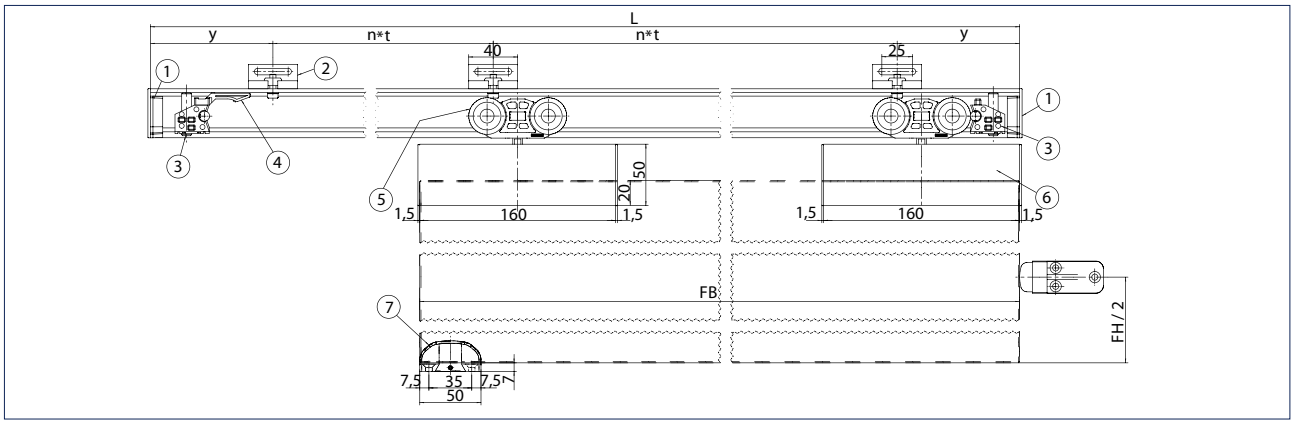

1 = End cap (optional)
2 = Wall attachment bracket Perlan 140
3 = Tube buffer
4 = Hold-open spring
5 = Double-roller carriage
6 = Clamping plate
7 = Adjustable floor guide
L = Track length
y = Distance end of track to centre of first drilled hole
FB = Leaf width
FH = Leaf height
n = Quantity
t = Hole spacing

Can be fixed directly or with a plate on the ceiling or a bracket on the wall:

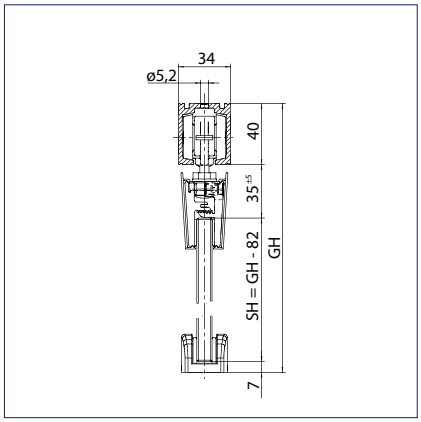

Direct ceiling mounting
SH = Panel height
GH = Total height

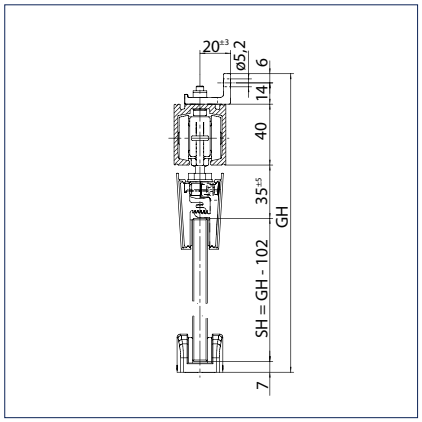

Wall mounting with angle
SH = Panel height
GH = Total height

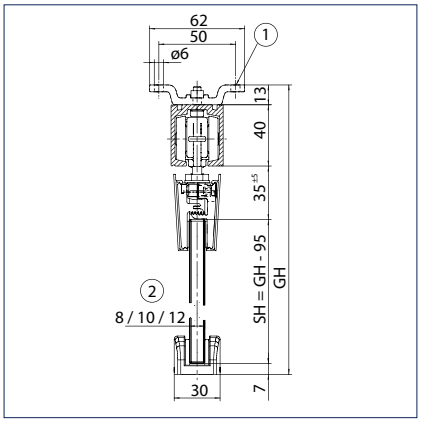

Ceiling installation with plate
SH = Panel height
GH = Total height
1 = Ceiling attachment angle Perlan 140
2 = Thickness of glass

GEZE SLIDING DOOR SYSTEMS

Stainless steel floor guide version

Adjustable glass floor guide EV1

GEZE glass clamping plate 45 mm - Order information

Description	Length	Version	ID.No.
Glass clamping plate 45 mm set, without cover Comprising 2 x glass clamping plates inc. suspension bolts, up to 140 kg leaf weight, for 8-12 mm ESG			125586
Glass clamping plate 45 mm set, individually covered Comprising 2 x glass clamping plates inc. suspension bolts, individual cover profiles and end covers, up to 140 kg leaf weight, for 8-12 mm ESG		EV1	125585
		stainless steel colour	134986
		acc. to RAL	126216
Glass clamping plate 45 mm set, continuously covered Comprising 2 x glass clamping plates inc. suspension bolts, continuous bespoke cover and end covers, EV1 or stainless steel colour, up to 140 kg leaf weight, for 8-12 mm ESG			125588
Accessories			
Cover profile glass clamping plate 45 mm For continuous cover, 1 profile	3000 mm	EV1	126107
	3000 mm	stainless steel colour	135034
Cover profile glass clamping plate 45 mm For continuous cover, bespoke		EV1	127628
		stainless steel colour	135033
		acc. to RAL	126108
Set of end pieces for glass clamping plate 45 mm 2 x end pieces for mounting on the outside of the leaf for attachment of the continuous cover and side caps			133740
Set of end covers for glass clamping plate 45 mm for 2 glass clamping plates		EV1	137359
		black	125582
		stainless steel colour	137360
		acc. to RAL	127498
Clamping insert glass clamping plate 45 mm and Levolan 150 for 2 glass clamping plates, for use with 12.7 mm (1/2 inch) ESG			133022
Set VSG glued fixing for use with VSG glass in connection with glass clamping plate 45 mm and Levolan 150, for 2 clamping plates, WITHOUT adhesive			133099
Glass/metal bonding set 5x1 g for up to 5 doors			133056
Glass/metal bonding set 50 g for up to 30 doors			133039

GEZE glass clamping plate 30 mm

Inconspicuous and easy to install

The small glass clamping plate enables minimum installation height for maximum use options. Doors up to 80 kg are securely clamped without glass preparation or gluing. Due to an overall height of only 30 millimetres, the glass clamping plate is not visible when installed in a standard wall recess. Its length of only 110 mm enables diverse use for almost all door widths. It can be used in conjunction with the GEZE's manual sliding systems Rollan 40N/80 and Perlan SoftStop, and with Perlan AUT/Perlan AUT-NT. The glass clamping plate for Perlan AUT/Perlan AUT-NT fits concealed under the clip-on cover 100. The result is a complete system for automated glass doors. The simple installation using clamping plates makes all glass preparation work superfluous. All the usual types of glass can be covered (ESG 8, 10, 12 millimetres and VSG up to 12.76 millimetres with an additional VSG kit). Individual design options due to the possibility of covering each of the individual panels, or continuous covering across both panels.

GEZE glass clamping plate 30 mm

Application range

- For all GEZE sliding systems
- For ESG (toughened safety glass) 8, 10, 12 mm as well as laminated safety glass up to 12.76 mm with additional laminated safety glass adhesive kit (without glass preparation) and wooden leaf
- For leaf weights up to 80 kg

Technical data

Product features	GEZE glass clamping plate 30 mm
Door material	Glass
Automated	●
Fixed panel	●
Draw-in damping	●

● = YES

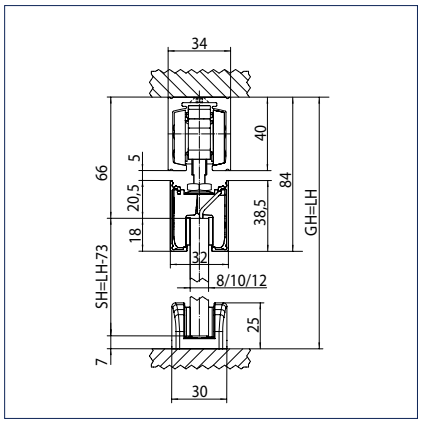

Ceiling installation
GH = Total height
LH = Clear height
SH = Panel height
TÜ = Door protrusion

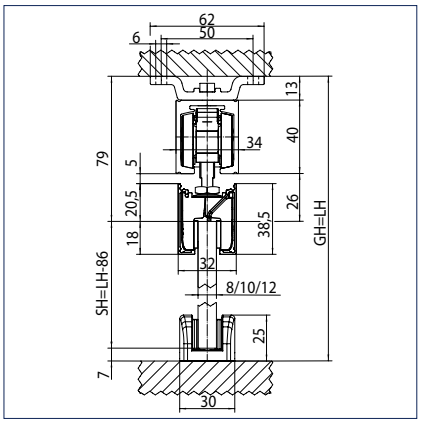

Ceiling installation with angle
GH = Total height
LH = Clear height
SH = Panel height
TÜ = Door protrusion

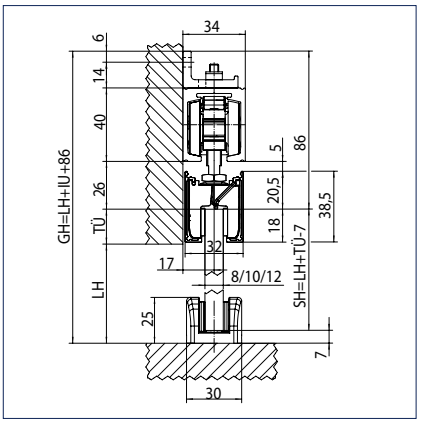

Wall installation with GKP 30 mm
GH = Total height
LH = Clear height
SH = Panel height
TÜ = Door protrusion

GEZE glass clamping plate 30 mm - Order information

Description	Length	Version	ID.No.
Glass clamping plate 30 mm set, continuously covered Comprising 2 x glass clamping plates inc. suspension bolts, continual bespoke cover and end covers, EV1 or stainless steel colour, up to 80 kg leaf weight, for 8-12 mm ESG			142368
Glass clamping plate 30 mm set, individually covered Comprising 2 x glass clamping plates inc. suspension bolts, individual cover profiles and end covers, up to 80kg leaf weight, for 8-12 mm ESG		EV1	142365
		stainless steel colour	142366
		acc. to RAL	142367
Glass clamping plate 30 mm set, without cover Comprising 2 x glass clamping plates inc. suspension bolts, up to 80 kg leaf weight, for 8-12 mm ESG			142364
Accessories			
Cover profile glass clamping plate 30 mm For individual cover of 2 glass clamping plates		EV1	144032
		stainless steel colour	144033
Cover profile glass clamping plate 30 mm For continuous cover, bespoke		EV1	141695
		stainless steel colour	141696
		acc. to RAL	141697
Cover profile glass clamping plate 30 mm For continuous cover, 2 profiles	3000 mm	EV1	142371
	3000 mm	stainless steel colour	142372
Set of end pieces for glass clamping plate 30 mm 2 pcs. end pieces for mounting on the outside of the leaf for attachment of the continual cover and side caps, necessary where the cover projects > 200 mm beyond the glass clamping plate			142373
Set of end covers for glass clamping plate 30 mm for 2 glass clamping plates		EV1	143346
		black	142369
		stainless steel colour	143347
		acc. to RAL	142370
Clamping insert, glass clamping plate 30 mm for 2 glass clamping plates, for use with 12.7 mm (1/2 inch) ESG			142634
Set LSG glued fixing 30 mm glass clamping plate for use with LSG glass in connection with glass clamping plate 30 mm, for 2 clamping plates, WITHOUT adhesive			142386
Glass/metal bonding set 5x1 g for up to 5 doors			133056
Glass/metal bonding set 50 g for up to 30 doors			133039

GEZE Perlan 140 SoftStop

Gentle closing with protection against entrapment

GEZE sliding door systems with Perlan 140 SoftStop draw-in damping perfectly combine comfort, convenience and safety for sliding doors. Uncontrolled stopping at the frame or the buffer is now a thing of the past. The door is braked gently and automatically returns to the zero position. The gentle draw-in to the end position is easy on the door and the fitting and increases the door's life. With a total height of only 40 mm, Perlan 140 SoftStop is completely concealed in the track. The draw-in damping also acts as entrapment protection, as the door's movement is braked over the last centimetres of closing. GEZE Perlan 140 SoftStop is available as a standard for leaf widths between 515-1700 mm and leaf weights up to 80 kg.

The set contains a Perlan 140 SoftStop roller carriage for one or double-sided damping. The standard set also includes 1 or 2 carrier hooks including fixing screws, 2 x track buffers, 2 x suspension bolts as well as 2 x carrier plates.

GEZE Perlan 140 SoftStop

GEZE Perlan 140 SoftStop

Application range

- For wood, plastic, glass and metal leaves up to 80 kg leaf weight
- A glass clamping plate is available for glass leaves
- For all single- and multiple-leaf sliding doors
- Particularly well suited for doors in living and office spaces

Technical data

Product features	GEZE Perlan 140 SoftStop
Door material	Wood, Plastic, Metal, Glass
Leaf weight (max.)	80 kg
Corrosion protection class	2
Fixed panel	●
Draw-in damping	●

● = YES

SoftStop draw-in damping

Drawing No. 10421-ep36

Mounting with glass leaf, double-sided, long, damping in both directions

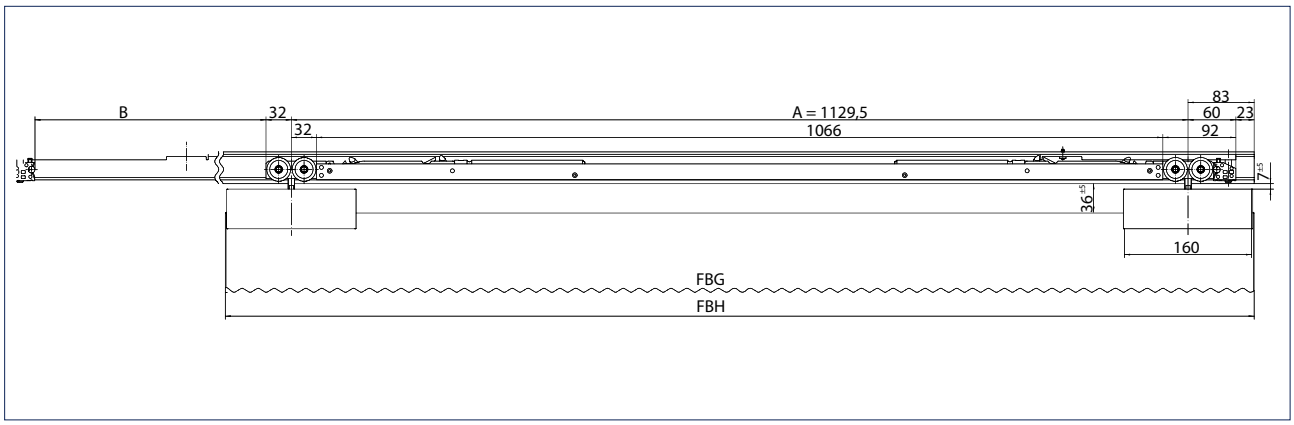

FBG= Leaf width glass
FBH= Leaf width wood
A = Distance between suspension bolts

SoftStopDuo draw-in damping

Mounting with wooden leaf, damping in both directions, Perlan SoftStopDuo

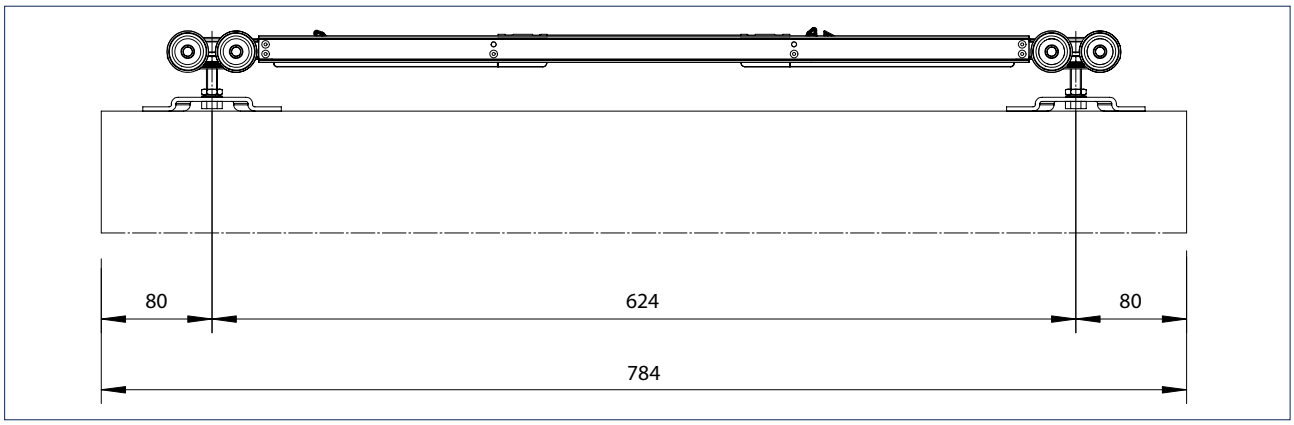

Mounting with wooden leaf, one-sided, short, damping in one direction

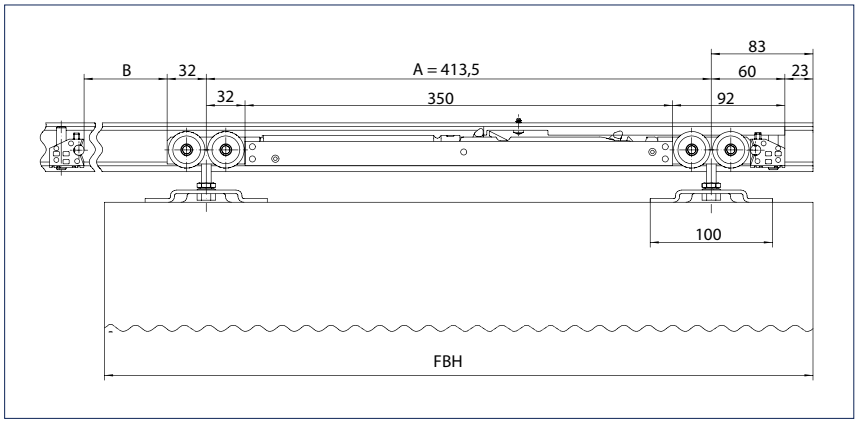

FBH= Leaf width wood
A = Distance between suspension bolts

Mounting with glass leaf, one-sided, short, damping in one direction

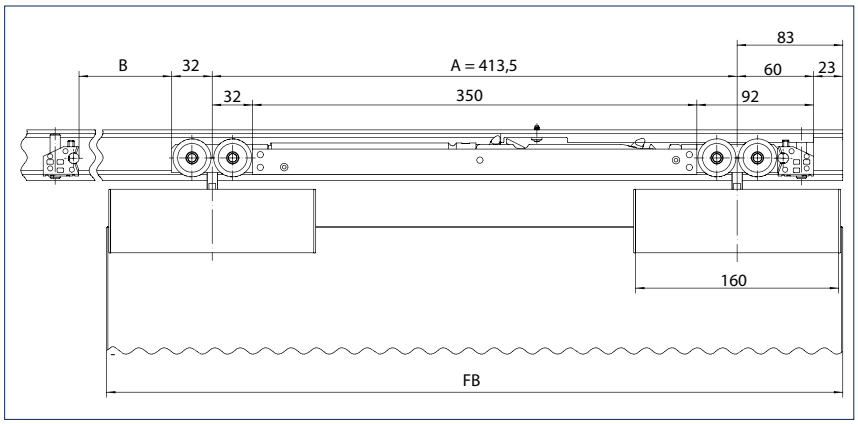

FBG= Leaf width glass
A = Distance between suspension bolts

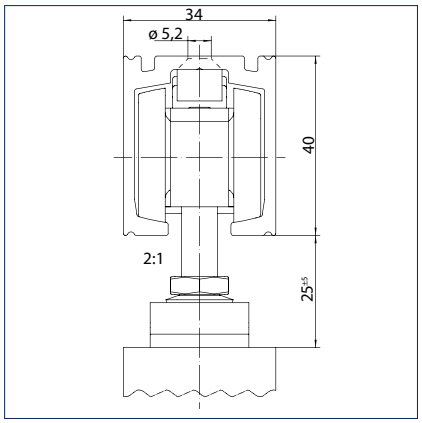

Direct ceiling mounting

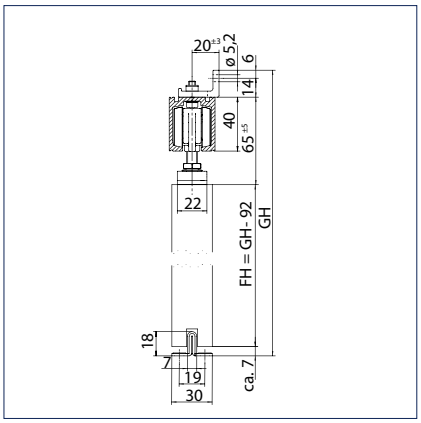

Wall mounting with angle
FH = Leaf height
GH = Total height

GEZE Perlan 140 SoftStop - Order information

Description	Leaf width from - to	Length	Version	ID.No.
Perlan 140 set for wooden leaves For ceiling installation with standard carrier plate and Perlan SoftStop, up to 80 kg leaf weight	535 mm 1000 mm	2050 mm	EV1	134887
	860 mm 1240 mm	2450 mm	EV1	134888
Perlan 140 set for wooden leaves For wall installation with carrier plate, standard wall attachment bracket and Perlan SoftStop, up to 80 kg leaf weight	535 mm 1000 mm	2050 mm	EV1	134891
	860 mm 1240 mm	2450 mm	EV1	134892
Perlan 140 set for glass leaves For ceiling attachment with glass clamping plate individual cover and Perlan SoftStop, up to 80 kg leaf weight. Perlan SoftStop one-sided, with 2450 mm track on both sides.	575 mm 1000 mm	2050 mm	EV1	134851
	900 mm 1240 mm	2450 mm	EV1	134852
	575 mm 1000 mm	2050 mm	stainless steel colour	134857
	900 mm 1240 mm	2450 mm	stainless steel colour	134858
Perlan 140 set for glass leaves For wall attachment with concealed wall bracket, glass clamping plate individual cover and Perlan SoftStop, up to 80 kg leaf weight. Perlan SoftStop one-sided, with 2450 mm track on both sides.	575 mm 1000 mm	2050 mm	EV1	134854
	900 mm 1240 mm	2450 mm	EV1	134855
	575 mm 1000 mm	2050 mm	stainless steel colour	134860
	900 mm 1240 mm	2450 mm	stainless steel colour	134861
Accessories				
Perlan SoftStop set, short version, dampening on one side, up to 80 kg The set includes: 1 x roller carriage with damping unit on one side, 2 x buffers, 1 x driver with attachment screw, 2 x standard carrier plates	575 mm 900 mm			128876
Set Perlan SoftStopDuo, damped on both sides, up to 80 kg The set includes: 1 x roller carriage with damping unit on both sides, 2 x buffers, 2 x drivers with attachment screws, 2 x standard carrier plates	750 mm 1290 mm			150071
Perlan SoftStop set, medium version, dampening on one side, up to 80 kg The set includes: 1 x roller carriage with damping unit on one side, 2 x buffers, 1 x driver with attachment screw, 2 x standard carrier plates	900 mm 1290 mm			128877
Perlan SoftStop set, medium version, dampening on one side, up to 80 kg The set includes: 1 x roller carriage with damping unit on one side, 2 x buffers, 1 x driver with attachment screw, 2 x standard carrier plates	900 mm 1290 mm			128877
Perlan SoftStop set, long version, dampening on both sides, up to 80 kg The set includes: 1 x roller carriage with damping unit on both sides, 2 x buffers, 2 x drivers with attachment screws, 2 x standard carrier plates	1290 mm 1700 mm			128891

GEZE Perlan 140 GGS

The elegant design fitting for all-glass systems

GEZE all-glass systems are used on automatic and manual door systems with horizontally moved door leaves. It is an elegant and hand-polished stainless steel, single point fixing. The track fixing for wall and ceiling (guide rail) ensures flexible use in all rooms. The height of the single point glass fixings can be adjusted via an elongated hole. The Perlan 140 offers permanent quiet running through two precision ball bearings per roller carriage, track design and large-dimensioned carrier rollers. The inner, sealed ball bearings provide corrosion protection for the slightly damp interior rooms and are therefore also suitable, for example, for bathroom doors. The track made of anodised lightweight metal alloy reduces attrition and also provides increased corrosion protection. The profile has no interfering edges, and all accessory parts run in the rail. The Perlan 140 is therefore ideally suited for mounting in the visible area. The distance between the leaf and the wall can be adjusted using the wall attachment bracket, in this way the door can be set to the individual situation, e.g. for precise mounting of the track if there is any unevenness in the masonry. Adjustable glass floor guides are available for different glass thicknesses.

There is a large number of complete sets for all kinds of different applications. These always contain all the parts required to install the sliding door: track available in different lengths and matching fixing bracket, e.g. for wall fixing, roller carriages, GGS holder, tube buffers and floor guide. Alternatively, the track (6 m long or customized length) and the accessories can be ordered separately. On request the track is also available curved.

GEZE Perlan 140 GGS

GEZE Perlan 140 GGS

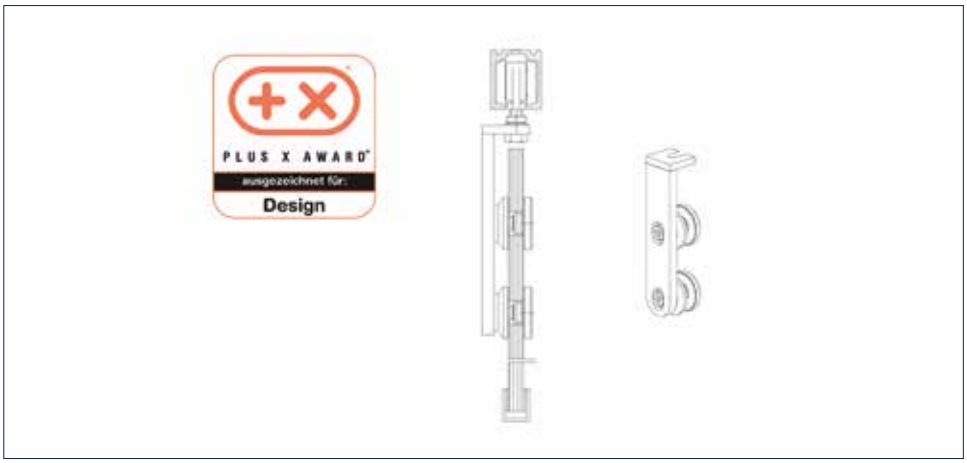

Application range

- For single and multi-leaf sliding doors
- For homes and offices
- For room, wardrobe and cupboard doors
- As partitioning and as screening

Technical data

Product features	GEZE Perlan 140 GGS
Door material	Wood, Glass
Leaf weight (max.)	140 kg
Leaf weight (max.) with draw-in damping	80 kg
Corrosion protection class	2

• = YES

Note

The wall recesses must be made accessible by a removable fascia. The door leaf must be stopped by a further angle buffer – in addition to the tube buffer. The buffer must be attached at the mid door height!

Mounting with glass leaf

Drawing No. 10417-ep32

Mounting on a 1-leaf sliding door with glass leaf (manual):

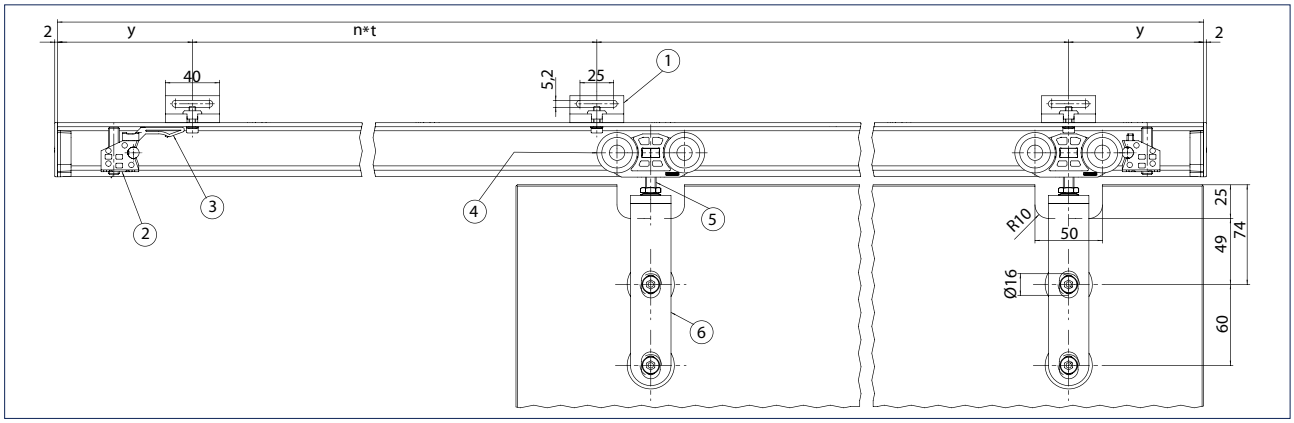

1 = Wall attachment bracket Perlan 140
2 = Tube buffer
3 = Hold-open spring
4 = Double-roller carriage
5 = Suspension bolt Perlan 140
6 = Set Perlan GGS glass leaf 8-12 mm
y = Distance end of track to centre of first drilled hole
n = Quantity
t = Hole spacing

The fitting can be fixed directly on the ceiling or fixed to the wall or ceiling using an angle bracket or plate:

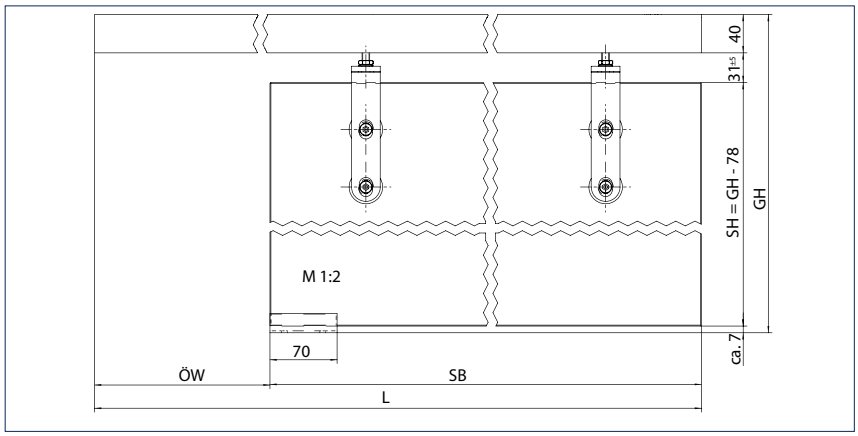

Ceiling installation
ÖW = Opening width
SH = Panel height
GH = Total height
SB = Panel width
L = Track length

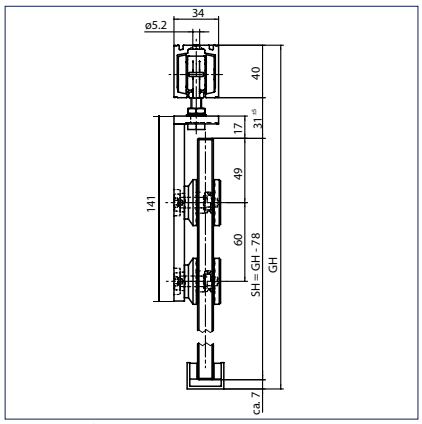

Direct ceiling mounting
SH = Panel height
GH = Total height

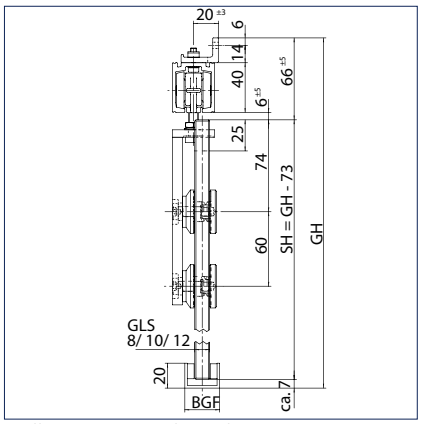

Wall mounting with angle
SH = Panel height
GH = Total height
BGF = Width of glass floor guide
GLS = Thickness of glass

Mounting with wooden leaves (manual)
Drawing No. 10421-ep31

The fitting for wooden doors 15-50 mm thick can be fixed directly on the ceiling or onto the wall using an angle bracket:

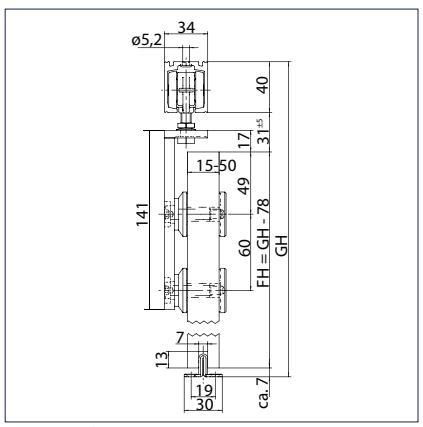

Direct ceiling mounting
FH = Leaf height
GH = Total height

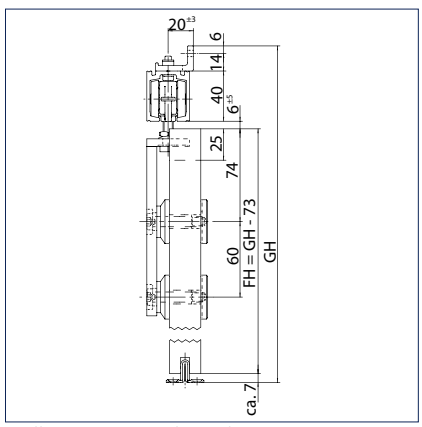

Wall mounting with angle
FH = Leaf height
GH = Total height

Mounting with fixed panel

Drawing No. 10421-ep35

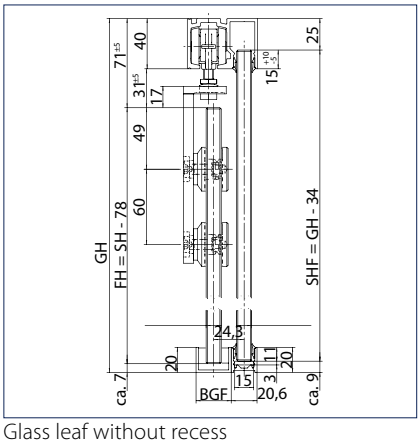

Glass leaf without recess
GH = Total height
FH = Leaf height
SH = Panel height
BGF = Width of glass floor guide
SHF = Panel height fixed panel

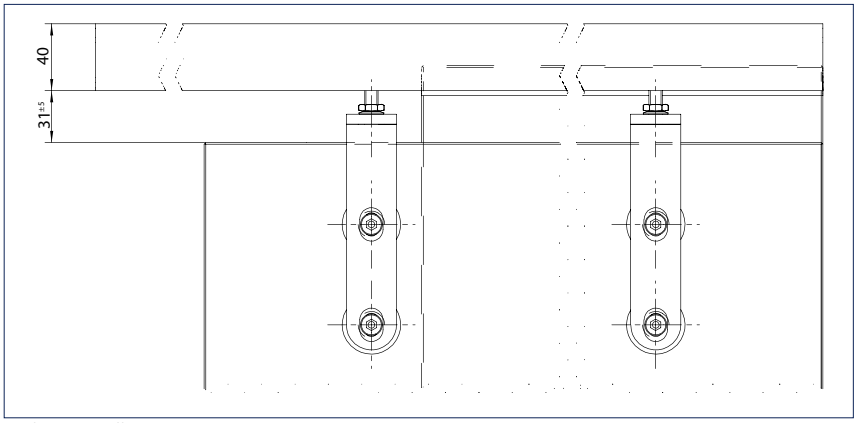

Ceiling installation

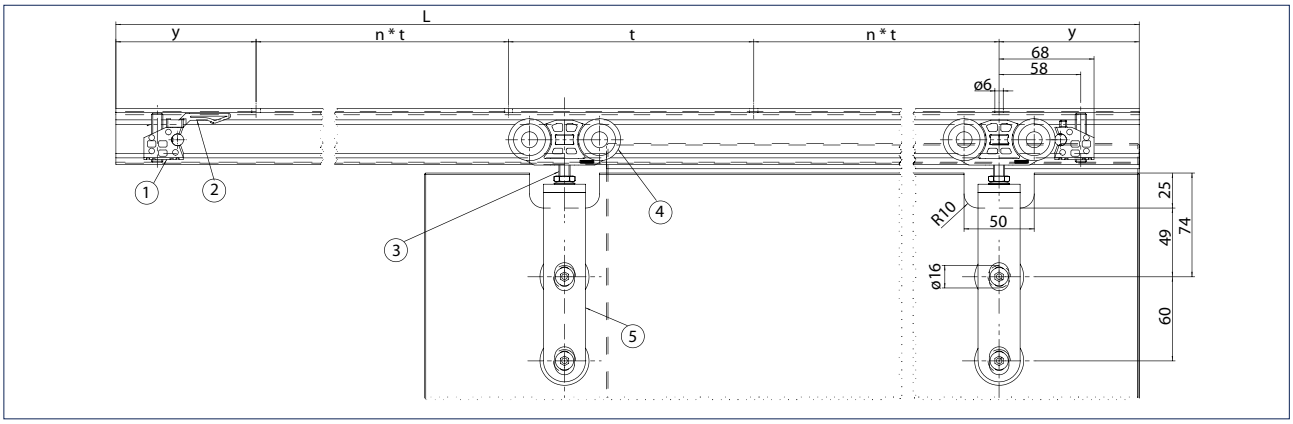

1 = Tube buffer
2 = Hold-open spring
3 = Suspension bolt Perlan 140
4 = Double-roller carriage
5 = Set Perlan GGS glass leaf 8-12 mm
L = Track length
y = Distance end of track to centre of first drilled hole
n = Quantity
t = Hole spacing

GEZE Perlan 140 GGS - Order information

Description	Version	ID.No.
GGS stainless steel single point fixing set 2 pieces, brushed, for wooden leaves and glass leaves 8-12 mm, including 4 Rampa sleeves (wood) and installation material for glass	Stainless steel	127961
Accessories		
Stainless steel floor guide For 8, 10, 12 mm glass	Stainless steel	134990

GEZE Perlan 140, concealed wall bracket

In order to achieve wall installation without on-side cover, installation must be as inconspicuous as possible. For this purpose, GEZE has developed a concealed wall bracket which, when combined with the glass clamping plate or the concealed carrier plate, offers minimum design space for a sliding door. The bracket is available in two different distances: for glass doors which are flush to the wall and for wooden doors with a larger distance to the wall (11 mm). The wooden door variant is also suitable for external applications. As required, the wall can be protected from water stains using sealing rubber. For all variants, GEZE supplies an end cover which can either be glued in place (internal application) or screwed in place (external application). The brackets and distance profiles are available in all track lengths as standard. Also in the standard length 6000 mm or cut to size.

GEZE Perlan 140, concealed wall bracket

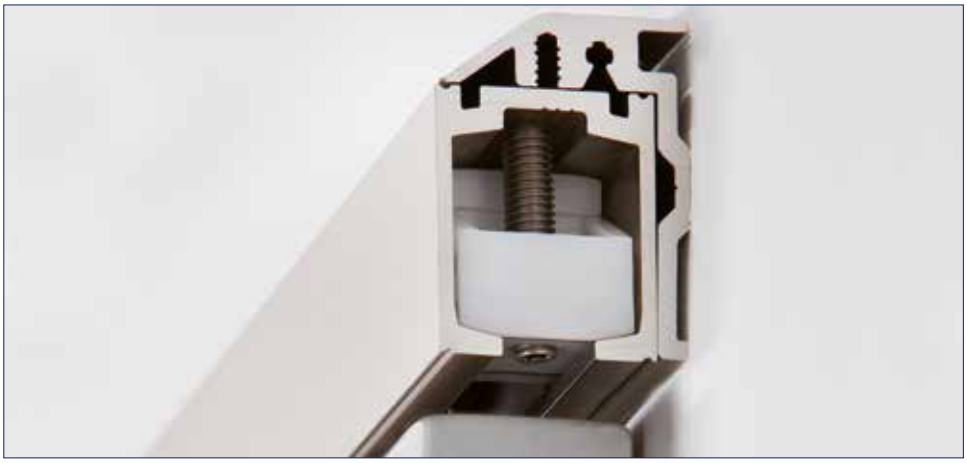

Continuous angle (e.g. glass leaf)

Application range

- For wood, plastic, glass and metal leaves up to 140 kg leaf weight
- For wall assembly within the visible area
- Mounting above a doorframe or wall tiles

Technical data

Product features	GEZE Perlan 140, concealed wall bracket
Door material	Wood, Plastic, Metal, Glass, Sliding shutters
Number of leaves	1-leaf, 2-leaf
Type of installation	Wall installation
Automated	•
Draw-in damping	•

• = YES

GEZE Perlan 140 concealed wall bracket with wooden leaf

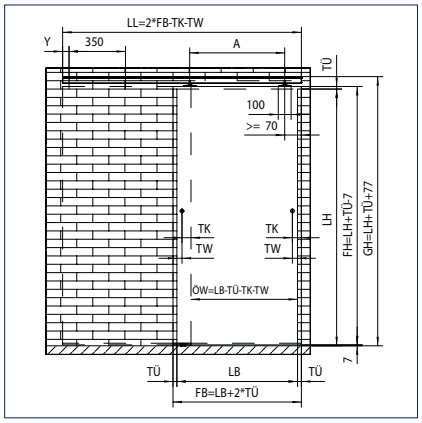

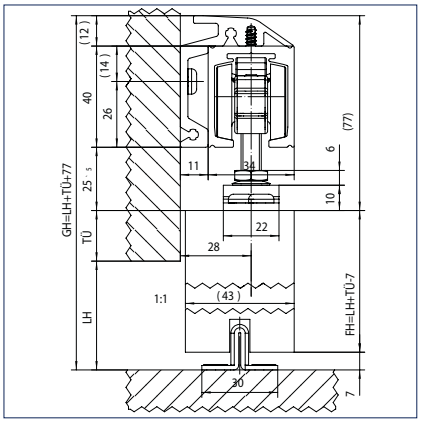

LL = Track length
FB = Leaf width
TK = Distance door handle to edge of leaf
TW = Distance door handle to wall
Y = Distance to first drill hole
A = Distance between suspension bolts
TÜ = Door clearance
LH = Clear height
LB = Clear width
GH = Total height
FH = Leaf height
ÖW = Opening width
SH = Panel height

GEZE Perlan 140 concealed wall bracket with glass leaf and glass clamping plate 30 mm

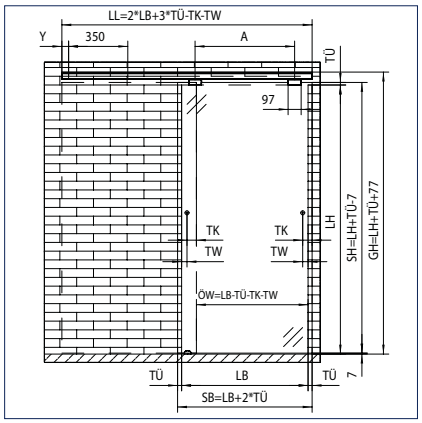

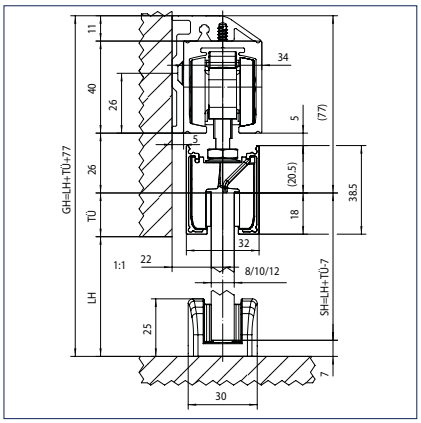

GEZE Perlan 140 concealed wall bracket with glass leaf and glass clamping plate 40 mm

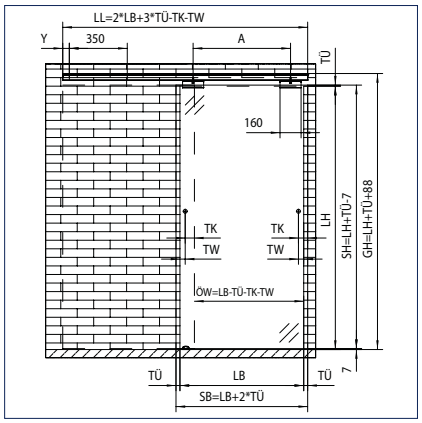

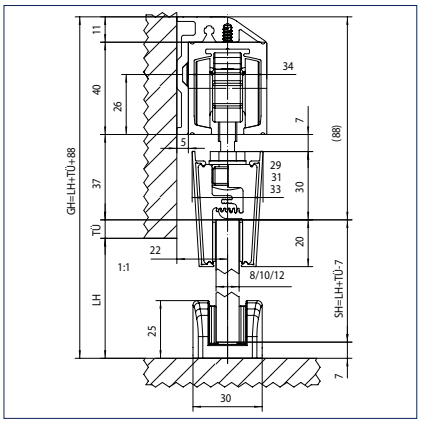

GEZE Perlan 140, concealed wall bracket - Order information

Description	Length	Version	ID.No.
Wall bracket, concealed, Perlan for use up to 37 mm leaf thickness	1650 mm	EV1	130419
	2050 mm	EV1	130418
	2450 mm	EV1	130417
	3250 mm	EV1	130415
	6000 mm	EV1	130414
	1650 mm	stainless steel colour	130466
	2050 mm	stainless steel colour	130465
	2450 mm	stainless steel colour	130464
	6000 mm	stainless steel colour	130463
Wall bracket, concealed, Perlan bespoke, for use up to 37 mm leaf thickness		EV1	130462
		stainless steel colour	130468
Wall bracket, concealed, Perlan for use up to 43 mm leaf thickness	1650 mm	EV1	130440
	2050 mm	EV1	130439
	2450 mm	EV1	130438
	3250 mm	EV1	130436
	6000 mm	EV1	130435
	1650 mm	stainless steel colour	130447
	2050 mm	stainless steel colour	130446
	2450 mm	stainless steel colour	130445
	6000 mm	stainless steel colour	130444
Wall bracket, concealed, Perlan bespoke, for use up to 43 mm leaf thickness		EV1	130443
		stainless steel colour	130449
Accessories			
Seal wall connection for use with Perlan „concealed wall bracket up to 43 mm“ or „Basic profile wall installation outdoors“	200000 mm	black	127311
Seal wall connection Made to measure, for use with Perlan „concealed wall bracket up to 43 mm“ or basic profile wall installation outdoors		black	127731
End cover set for concealed wall brackets up to 37 mm (2 pcs)		EV1	130432
		stainless steel colour	130433
End cover set for concealed wall brackets up to 43 mm (2 pcs)		EV1	130141
		stainless steel colour	130142
Set of countersunk screws for concealed wall bracket, Perlan 18 pcs., for fixing Perlan track (countersunk version) to concealed wall bracket			138708
Set of countersunk screws for concealed wall bracket, Perlan 100 pcs., for fixing Perlan track (countersunk version) to concealed wall bracket			132229

GEZE Perlan 140 spacer profile for concealed wall bracket

GEZE offers further spacer profiles for the concealed wood wall bracket, in order to create even more clearance from the wall. This is particularly necessary if the door is to move in front of a door frame or wall tiling. The spacer profile for the concealed wall bracket is simply screwed on the wall with the wall bracket along the length of the track and also provides an additional 10 or 20 mm clearance.

GEZE Perlan 140 spacer profile for concealed wall bracket

Application range

- For wood, plastic, glass and metal leaves up to 140 kg leaf weight
- For wall assembly within the visible area
- For mounting above a doorframe or wall tiles

Technical data

Product features	GEZE Perlan 140 spacer profile for concealed wall bracket
Door material	Wood, Plastic, Metal, Glass, Sliding shutters
Number of leaves	1-leaf, 2-leaf
Type of installation	Wall installation
Draw-in damping	•

• = YES

GEZE Perlan 140 spacer profile for concealed wall bracket - Order information

Description	Length	Version	ID.No.
Spacer profile 10 mm for concealed wall bracket Perlan 43 mm for use with „concealed wall bracket up to 43 mm", stackable up to 20 mm space	1650 mm	EV1	136679
	2050 mm	EV1	136680
	2450 mm	EV1	136711
	6000 mm	EV1	136712
	1650 mm	stainless steel colour	136713
	2050 mm	stainless steel colour	136714
	2450 mm	stainless steel colour	136715
	6000 mm	stainless steel colour	136716
Spacer profile 10 mm for concealed wall bracket Perlan 43 mm configured to customer wishes			136717
Accessories			
Seal wall connection for use with Perlan „concealed wall bracket up to 43 mm" or „Basic profile wall installation outdoors"	200000 mm	black	127311
Seal wall connection Made to measure, for use with Perlan „concealed wall bracket up to 43 mm" or basic profile wall installation outdoors		black	127731
End cover set for concealed Perlan wall bracket with 10 mm spacer (2 pcs)		EV1	136732
		stainless steel colour	136733
End cover set for concealed Perlan wall bracket with 20 mm spacer (2 pcs)		EV1	136734
		stainless steel colour	136735

GEZE Perlan 140 clip-on cover

The clip-on anodised aluminium cover enables simple design-oriented covering of the track as well as all load-bearing parts. It is also available in all RAL colours. This means optimum adaptation to the surroundings. The cover panel can be clipped directly into the cover fixing parts. Unsightly screws are therefore not necessary. Side covers are also available for the clip-on cover, made of anodised aluminium or available in all RAL colours.

GEZE Perlan 140 clip-on cover

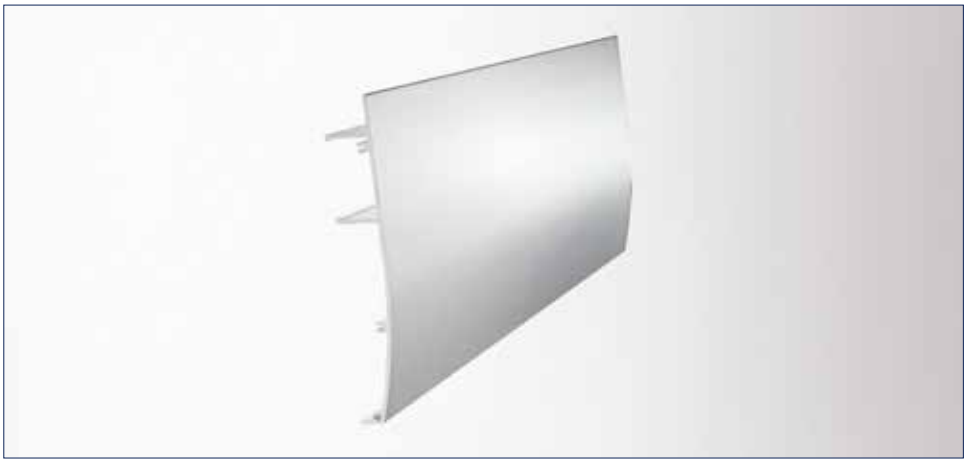

Application range

- For wall and ceiling installation
- For all single, multi-leaf and synchronous sliding doors
- For wood, plastic, glass and metal leaves up to 140 kg leaf weight
- Complete covering of all functional parts, including with Perlan AUT and Perlan Duosync

Technical data

Product features	GEZE Perlan 140 clip-on cover
Door material	Wood, Plastic, Metal, Glass
Type of installation	Wall installation, Ceiling installation
Automated	●
Draw-in damping	●

● = YES

Ceiling and wall fixing
Drawing No. 10421-ep20

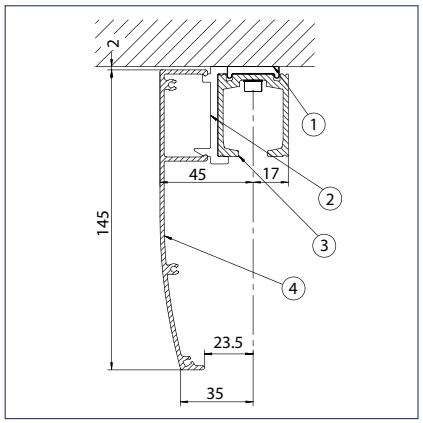

Clip-on cover for ceiling mounting
1 = Spacer
2 = Cover attachment parts
3 = Track
4 = Clip-on cover

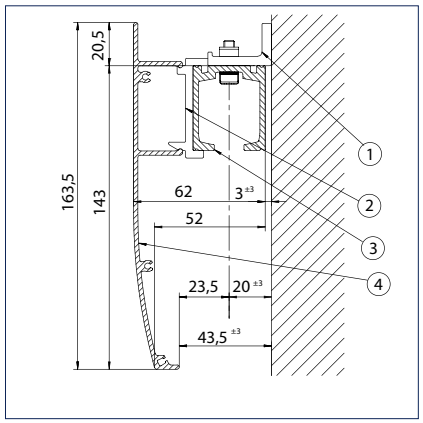

Clip-on cover for wall mounting
1 = Wall attachment bracket Perlan 140
2 = Cover attachment parts
3 = Track
4 = Clip-on cover

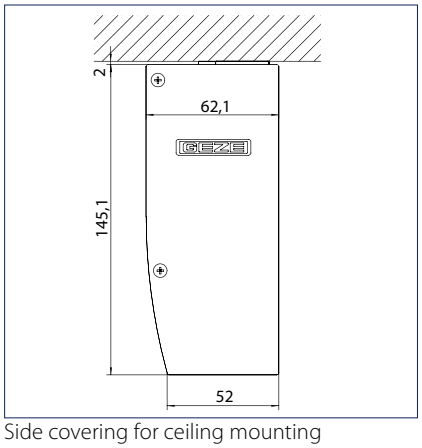

Side covering for ceiling mounting

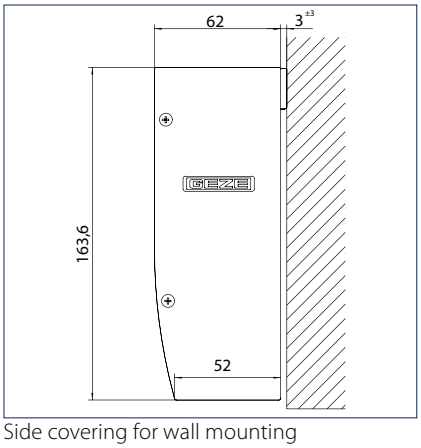

Side covering for wall mounting

GEZE Perlan 140 clip-on cover - Order information

Description	Length	Version	ID.No.
Complete clip-on cover set 145 for ceiling mounting, continuous cover, configured according to customer wishes			122939
Complete clip-on cover set 145 for wall assembly, continuous cover, configured according to customer wishes			122938
Accessories			
Clip-on cover 145 profile for ceiling mounting, continuous cover, bespoke		EV1	120437
		acc. to RAL	120436
Clip-on cover 145 profile for ceiling mounting, continuous cover	6000 mm	EV1	120991
Clip-on cover 145 profile for wall assembly, continuous cover, bespoke		EV1	120440
		acc. to RAL	120439
Clip-on cover 145 profile for wall assembly, continuous cover	6000 mm	EV1	120966
Set of end covers clip-on cover 145 For ceiling mounting		EV1	119483
		acc. to RAL	123703
Set of end covers clip-on cover 145 For wall assembly		EV1	119484
		acc. to RAL	123704
Clip-on cover set, 145° fixing bracket 5 pcs., for attaching the cover profile on the track			122928
Ceiling compensation set/ceiling spacer, stepless 6 pcs., continuously variable height compensation from 13 mm to 18 mm. For ceiling mounting using clip-on cover 100/145 as well as for general use on uneven ceilings			138099

GEZE Perlan 140 clip-on cover 100

The clip cover 100 with an overall height of only 100 mm enables visually attractive covering of the fittings technology underneath it. It is easily and securely attached using plastic clips, which ensure the cover is securely held regardless of the area of use. This means any tolerances in the aluminium profiles can be evened out. Different distances from the track are possible for glass and wooden doors: in the case of glass doors the clip cover is clipped directly into the track, in the case of wooden doors via additional spacer brackets, which are screwed onto the track. With the clip cover, GEZE has managed to keep the gap in glass doors visible from underneath as small as possible and yet nevertheless be able to use the same product for thick wooden doors, too.

GEZE Perlan 140 clip-on cover 100

Application range

- For covering the GEZE Perlan 140 and Rollan 40 N / 80 sliding door fittings
- For wall and ceiling installation
- For internal application
- For wood, plastic, glass and metal leaves up to 140 kg leaf weight

Technical data

Product features	GEZE Perlan 140 clip-on cover 100
Door material	Wood, Plastic, Metal, Glass
Type of installation	Wall installation, Ceiling installation
Telescope	●
Automated	●
Fixed panel	●
Draw-in damping	●

● = YES

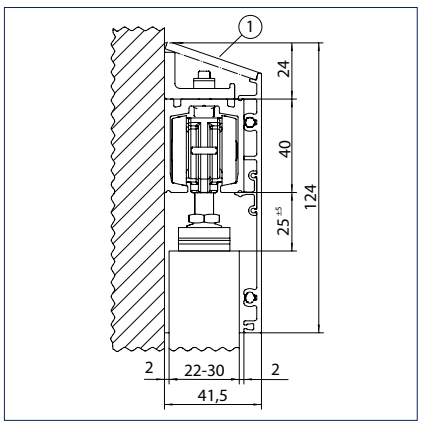

Clip-on cover wall installation, wooden leaf 22-30 mm

1 = Cover (optional) on-site recommendation 41x3

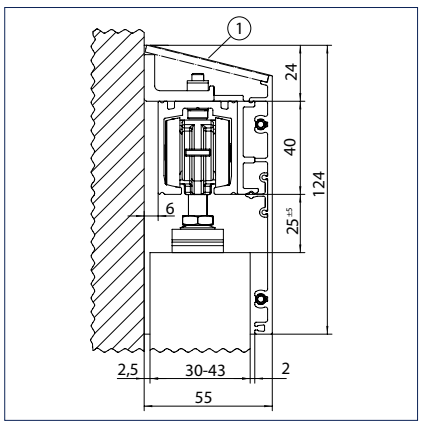

Clip-on cover wall installation, wooden leaf 30-43 mm

1 = Cover (optional) on-site recommendation 54x3

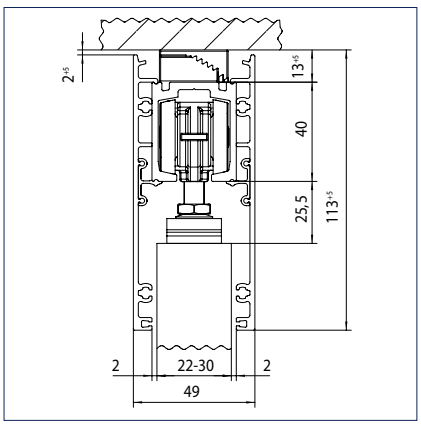

Clip-on cover ceiling installation, wooden leaf 22-30 mm

Ceiling compensation set/ceiling spacer, stepless

GEZE Perlan 140 clip-on cover 100 - Order information

Description	Length	Version	ID.No.
Complete clip-on cover set 100 for wall and ceiling mounting, continuous cover, configured according to customer wishes			138098
Accessories			
Clip-on cover 100 profile for wall and ceiling mounting, continuous cover	1650 mm	EV1	137602
	2050 mm	EV1	137603
	2450 mm	EV1	137604
	6230 mm	EV1	137606
	1650 mm	stainless steel colour	137608
	2050 mm	stainless steel colour	137609
	2450 mm	stainless steel colour	137611
	6060 mm	stainless steel colour	137613
Clip-on cover 100 profile for wall and ceiling mounting, continuous cover, bespoke, choice of finishes			137614
Set of end covers clip-on cover 100 2 pcs., narrow version, for use without spacer bracket		EV1	137865
		stainless steel colour	137867
		acc. to RAL	137869
Set of end covers clip-on cover 100 2 pcs., wide version, for use with spacer bracket		EV1	137864
		stainless steel colour	137866
		acc. to RAL	137868
Clip-on cover set 100 spacer bracket 6 pcs., enlarges the distance at the side of the clip-on cover by 7.5 mm at each side. For use with Perlan AUT NT as well as for leaf thicknesses from 30 mm			137754
Clip-on cover set 100 plastic clip 10 pcs., for the direct attachment of the clip-on cover 100 on the track or the spacer brackets			137863
Ceiling compensation set/ceiling spacer, stepless 6 pcs., continuously variable height compensation from 13 mm to 18 mm. For ceiling mounting using clip-on cover 100/145 as well as for general use on uneven ceilings			138099

GEZE Perlan 140 fixed panel

The integrated GEZE Perlan 140 solution with fixed panel creates transparent and comfortable passage passage doors. The virtually invisible floor and side profiles create a continuous, consistent appearance and augment the generous feeling of space provided by the glass appearance. The installation could not be any easier. The fixed panels are securely held by rubber seals. No gluing is necessary. GEZE Perlan 140 with fixed panel is available as a complete 3 m profile set for independent assembly. All profiles and accessories can also be ordered individually.

GEZE Perlan 140 fixed panel

Application range

- For fully glazed connecting walls
- For all standard door widths
- For fixed panels up to 13 mm ESG or VSG
- Can be combined as a system with virtually all Perlan 140 components

Technical data

Product features	GEZE Perlan 140 fixed panel
Door material	Glass
Number of leaves	1-leaf, 2-leaf
Type of installation	Ceiling installation
Automated	●
Fixed panel	●
Draw-in damping	●

● = YES

Standard installation
Drawing No. 10421-ep50

Note
The door leaf must be stopped by a further angle buffer – in addition to the tube buffer. The buffer must be attached at mid door height.

Option: Glass clamping plate continuously covered!

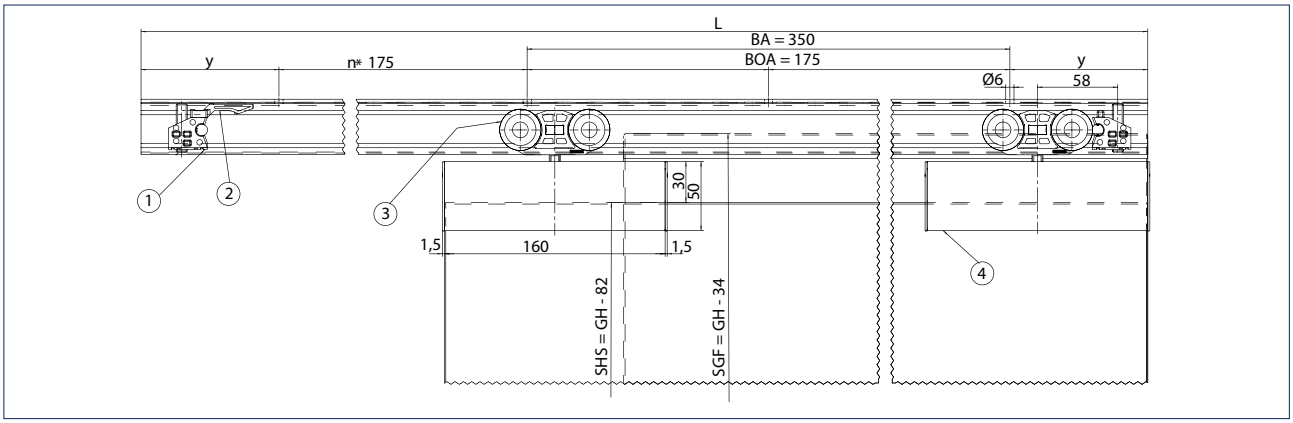

1 = Tube buffer
2 = Hold-open spring
3 = Double-roller carriage
4 = Glass clamping plate
L = Track length
BA = Fixing spacing
BOA = Drilled hole distance
y = Distance end of track to centre of first drilled hole
SHS = Panel height closing panel
SHF = Panel height fixed panel
GH = Total height
n = Quantity

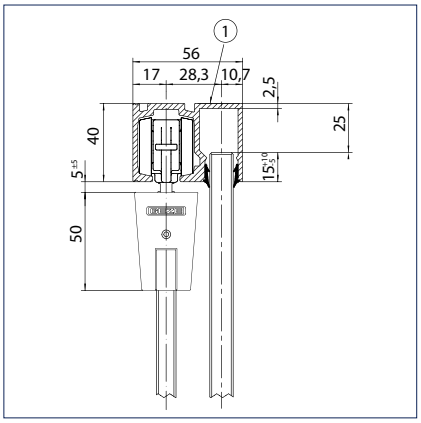

1 = Track for fixed panel

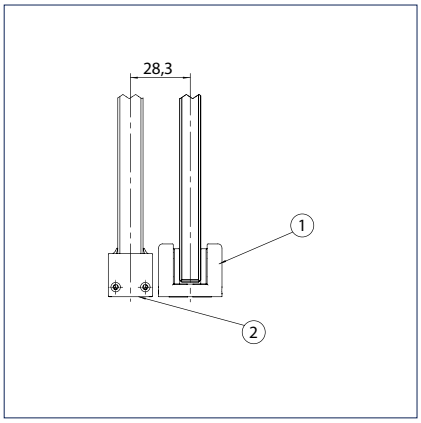

1 = Adjustable floor guide
2 = Cover cap for fixed panel

GEZE Perlan 140 fixed panel - Order information

Description	Length	Version	ID.No.
Perlan 140 track, fixed panel	3000 mm	EV1	126962
	6000 mm	EV1	126963
	6050 mm	stainless steel colour	128344
Perlan 140 track, fixed panel Customized		EV1	128077
		stainless steel colour	128345
Track Perlan 140 fixed panel with countersunk drill hole	6050 mm	EV1	128652
	6050 mm	stainless steel colour	128654
Track Perlan 140 fixed panel with countersunk drill hole Customized		EV1	128653
		stainless steel colour	128655
Perlan fixed panel set configured to customer wishes			128079
Perlan fixed panel set Profiles, complete set consisting of: Perlan fixed panel 3 m track, 1.5 m cover profile, 4.5 m U-profile, 12 m rubber seal		EV1	126995
Accessories			
Cover profile fixed panel for Perlan 140 / Levolan 60 for facing the fixed panel area not used with Perlan 140 / Levolan 60 as well as for top covering with glass installation Levolan 60	1500 mm	EV1	127004
	6000 mm	EV1	127003
	6050 mm	stainless steel colour	128342
Cover profile fixed panel for Perlan 140 / Levolan 60 Customized		EV1	128078
		stainless steel colour	128343
U-profile Perlan, Levolan fixed panel	1500 mm	EV1	126966
	3000 mm	EV1	126964
	6000 mm	EV1	126965
	6050 mm	stainless steel colour	128294
U-profile Perlan, Levolan fixed panel Customized		EV1	128076
		stainless steel colour	128295
Glass seal for Perlan / Levolan fixed panel for 8 / 10 / 12 mm glass thickness	12000 mm	grey	126869
End cover set with 2 x glazing supports for use with U-profile fixed panel on Perlan / Levolan systems		EV1	127001
		stainless steel colour	128361

GEZE Perlan 140 Duosync

The roller design fitting for synchronous opening and closing of 2-leaf doors

With the Perlan 140 Duosync, both leaves can be comfortably and conveniently opened and closed with only one handle. This is achieved almost silently by precision ball bearings and the toothed belt connection. The complete system has a low overall height and yet is nevertheless stable and virtually maintenance free. If required the system can be concealed using the GEZE clip cover system. Duosync is available for both wooden and glass doors.

The accessories set includes 1 x toothed belt 12.5 m, 2 x deflection pulleys, 1 x belt coupler, 1 x adapter for wooden or glass leaves (depending on the set). Perlan 140 Duosync can be combined with any standard Perlan set.

GEZE Perlan 140 Duosync

Application range

- For wood, plastic, glass and metal leaves up to 140 kg leaf weight
- For large opening widths up to 2400 mm, special widths on request
- For leaf widths from 500 mm
- Compatible with virtually all Perlan 140 accessories

Technical data

Product features	GEZE Perlan 140 Duosync
Door material	Wood, Plastic, Metal, Glass, Sliding shutters
Leaf weight (max.)	140 kg
Opening width (max.)	2400 mm
Type of installation	Wall installation, Ceiling installation
Telescope	●
Fixed panel	●

● = YES

Standard installation
Drawing No. 10421-ep08

Note
The door leaf must be stopped by a further angle buffer – in addition to the tube buffer. The buffer must be attached at mid door height.

The wall recesses must be made accessible by a removable fascia. We recommend dampening the main closing edge by using elastic buffers to be installed by the customer on site.

Mounting to a synchronous double-leaf sliding door with glass leaf and glass clamping plate

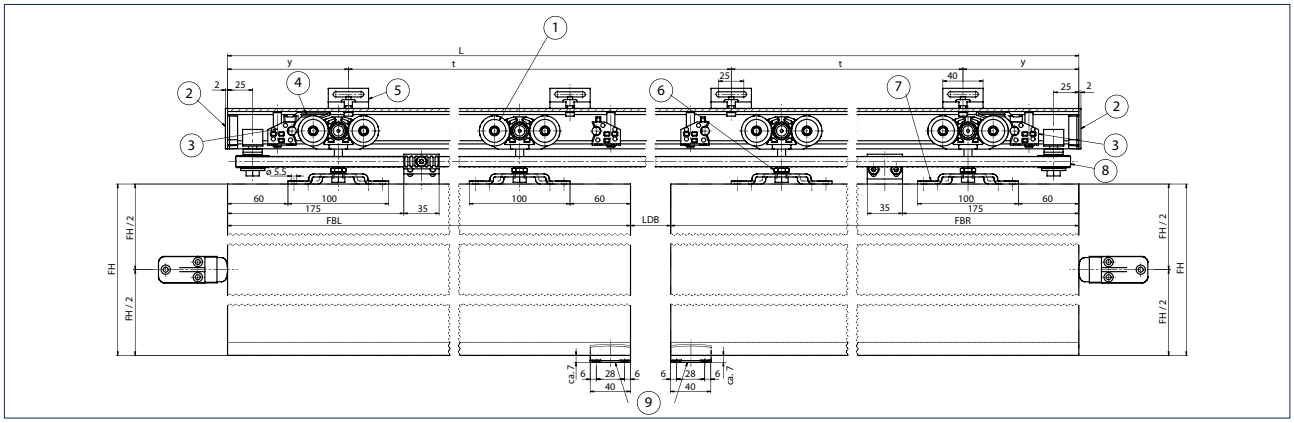

1 = Double-roller carriage
2 = End cap (optional)
3 = Tube buffer
4 = Hold-open spring
5 = Wall attachment bracket Perlan 140
6 = Suspension bolt Perlan 140
7 = Carrier plate
8 = Duosync set
9 = Floor guide
L = Track length
y = Distance end of track to centre of first drilled hole
t = Hole spacing
FBL = Leaf width left-hand leaf
LDB = Clear passage width
FBR = Leaf width right-hand leaf
FH = Leaf height

Can be fixed directly or with a plate on the ceiling or a bracket on the wall:

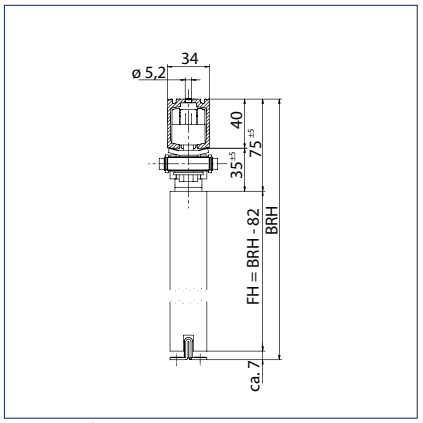

Direct ceiling mounting
FH = Leaf height
BRH = Overall height

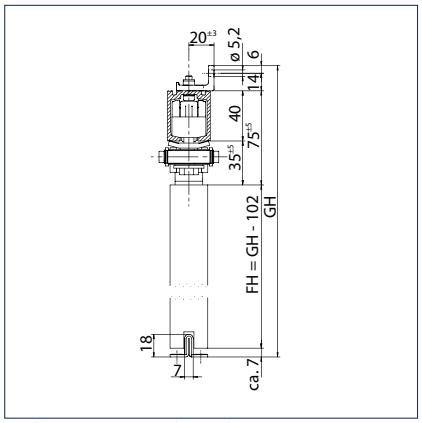

Wall mounting with angle
FH = Leaf height
GH = Total height

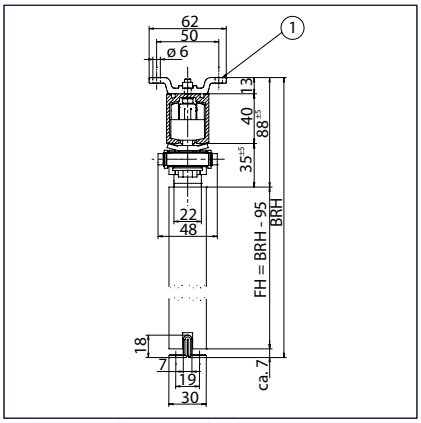

Ceiling installation with plate
1 = Ceiling attachment angle Perlan 140
FH = Leaf height
BRH = Overall height

Standard installation on glass leaves

Drawing No. 10421-ep09

Mounting to a synchronous double-leaf sliding door with glass leaf and glass clamping plate

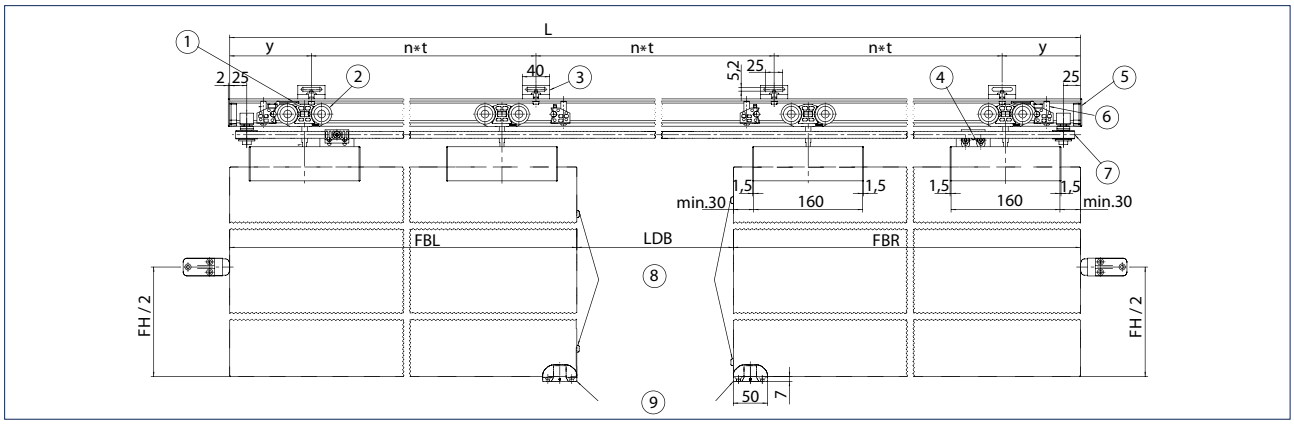

1 = Hold-open spring
2 = Double-roller carriage
3 = Wall attachment bracket Perlan 140
4 = Duosync glass adapter
5 = Tube buffer
6 = End cap (optional)
7 = Duosync set
8 = Elastic buffer (on site)
9 = Adjustable floor guide
L = Track length
y = Distance end of track to centre of first drilled hole
t = Hole spacing
FBL = Leaf width left-hand leaf
FBR = Leaf width right-hand leaf
LDB = Clear passage width
FH = Leaf height
n = Quantity

The fitting can be fixed directly on the ceiling or fixed to the wall or ceiling using an angle bracket or plate:

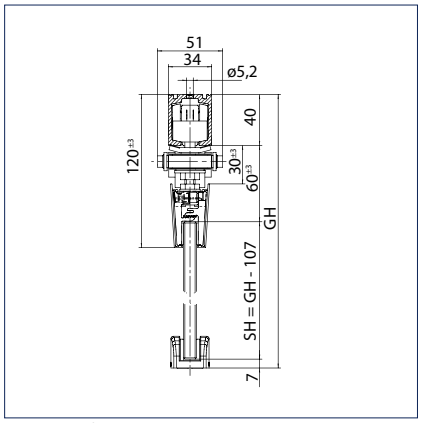

Direct ceiling mounting
SH = Panel height
GH = Total height

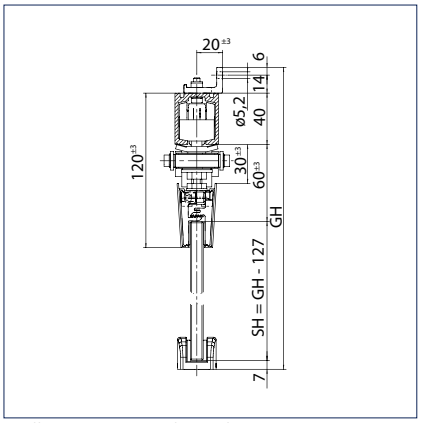

Wall mounting with angle
SH = Panel height
GH = Total height

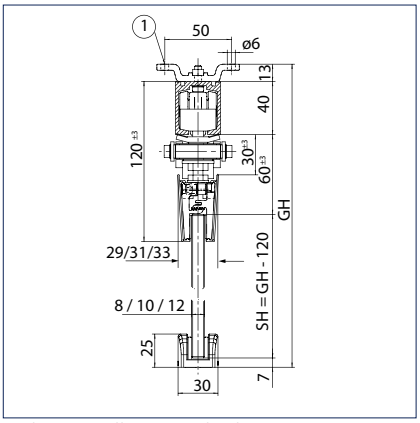

Ceiling installation with plate
GLS = Thickness of glass
SH = Panel height
GH = Total height
1 = Ceiling attachment angle Perlan 140

GEZE Perlan 140 Duosync - Order information

Description	ID.No.
Perlan Duosync 2 set for wooden leaves for the synchronisation of double-leaf doors up to 140 kg per leaf, comprising: 2 x return pulley, 2 x driver for wood, toothed belt 12.5 m, mounting material	139206
Perlan Duosync 2 set for glass leaves for the synchronisation of double-leaf doors up to 140 kg per leaf, comprising: 2 x return pulley, 2 x driver, glass clamping plate 45mm, toothed belt 12.5 m, mounting material	139207
Accessories	
Driver glass clamping plate 30 mm for Perlan AUT NT + Duosync 2, including 2 x extended suspension bolts	143295
Driver glass clamping plate 45 mm for Perlan AUT NT + Duosync 2, including 2 x extended suspension bolts	134281
Driver wood for Perlan AUT NT / AUT 2 / Duosync 2, including 2 x extended hanger bolts	134280

GEZE Perlan 140 Telescope

Perlan 140 Telescope is the elegant, space-saving roller sliding door system for large and comfortable passage doors. It also provides reliable protection against the sun's radiation when used together with sliding shutters. High-quality bearing and the self-cleaning track ensure a long life, even for automated operation. The Telescope set can be conveniently pre-assembled on the sliding door elements. Perlan 140 Telescope can be combined with Perlan Duosync or Perlan AUT. If automating doors with Perlan AUT, ensure that the outer leaf is always driven. The maximum total leaf weight with Perlan AUT is 80 kg. Perlan 140 Telescope is available as a complete accessory set for a 2-leaf door system. It includes all the parts required for the telescopic function. An extension set is available for each additional leaf. The GEZE installation tool or crimping pliers are required to install the wire cable. The Perlan 140 sliding door system must be ordered separately.

GEZE Perlan 140 Telescope

GEZE Perlan 140 Telescope

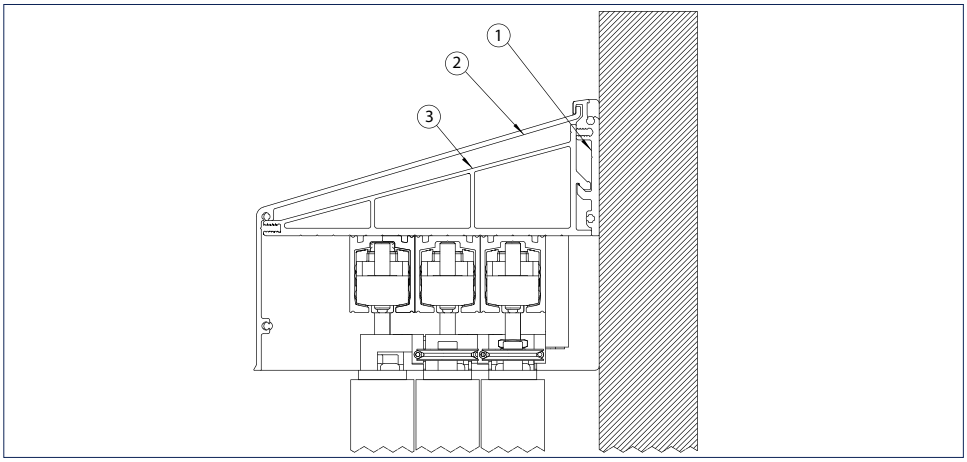

Wall installation with wall bracket (optional), 3-leaf
1 = Wall installation profile
2 = Cover hood, long
3 = Fixing bracket, long

Application range

- For wood, plastic and metal leaves
- For 2 or 3-leaf door systems up to 140 kg per leaf
- Minimum leaf width 475 mm per leaf
- Compatible with virtually all Perlan 140 accessories
- All other features according to the Perlan 140 product range

Technical data

Product features	GEZE Perlan 140 Telescope
Door material	Wood, Plastic, Metal, Sliding shutters
Number of leaves	2-leaf, 3-flügelig
Type of installation	Wall installation, Ceiling installation
Telescope	●
Automated	●

● = YES

Standard installation

Drawing No. 10421-ep-40 (3-leaf) + 10421-ep-41 (2-leaf)

Mounting, 2-leaf:

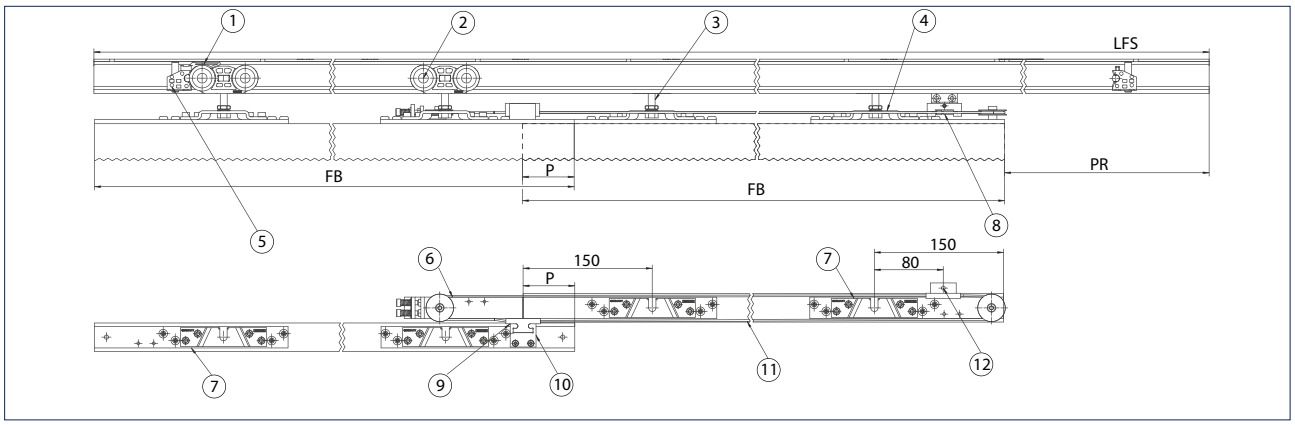

1 = Hold-open spring
2 = Double-roller carriage
3 = Suspension bolt Perlan 140
4 = Carrier plate
5 = Tube buffer
6 = Set bracket, long
7 = Bracket, short
8 = Crimp sleeve
9 = Rope lock
10 = Door leaf adapter
11 = Rope set
12 = Wall/ceiling adapter
LFS = Track
FB = Leaf width
PR = Stacking area
P = Door overlap

Mounting, 3-leaf:

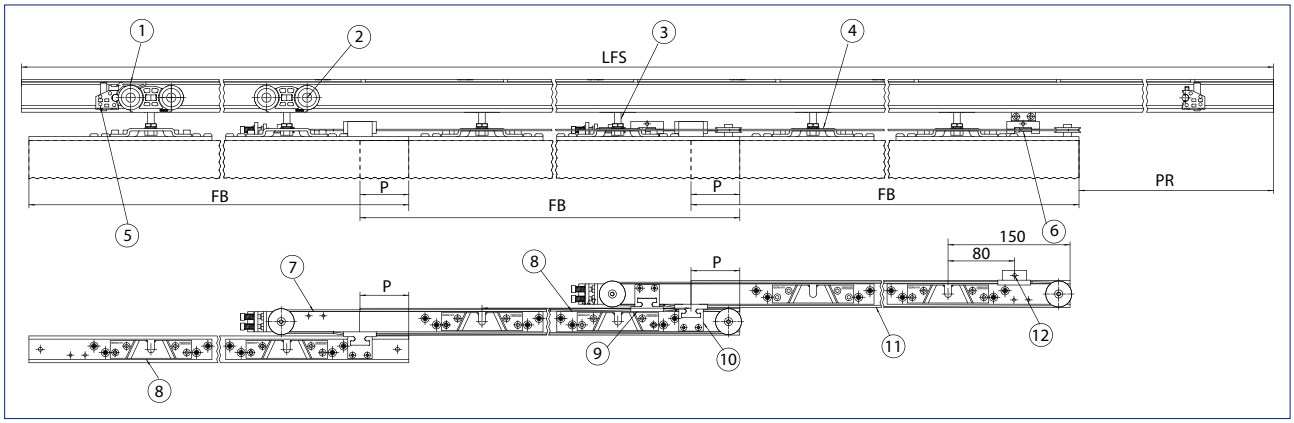

1 = Hold-open spring
2 = Double-roller carriage
3 = Suspension bolt Perlan 140
4 = Carrier plate
5 = Tube buffer
6 = Crimp sleeve
7 = Set bracket, long
8 = Set bracket, short
9 = Rope lock
10 = Door leaf adapter
11 = Rope set
12 = Wall/ceiling adapter
LFS = Track
FB = Leaf width
PR = Stacking area
P = Door overlap

Ceiling installation, 2-leaf:

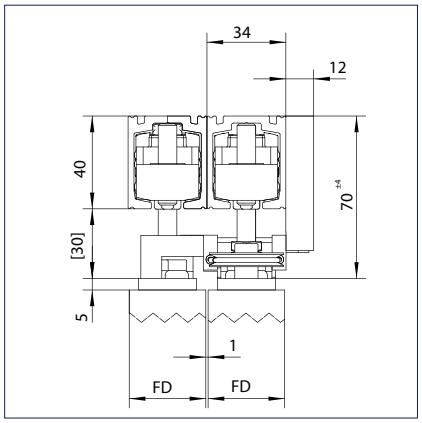

FD = Leaf thickness

Ceiling installation, 3-leaf:

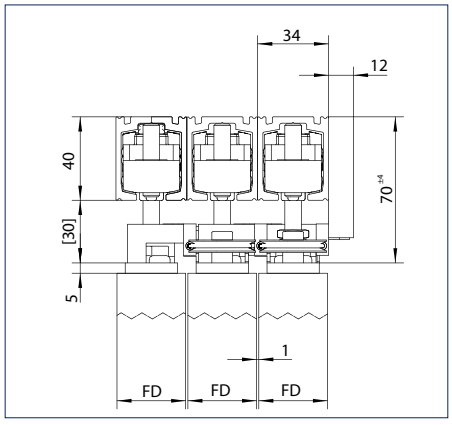

FD = Leaf thickness

GEZE Perlan 140 Telescope - Order information

Description	ID.No.
Perlan telescopic set, 2-leaf for the telescopic movement of wooden leaves, comprising: complete telescopic mechanism with mounting material, wire cable 3.8 m, including 4 x carrier plates Perlan 140 KS	130891
Perlan telescopic set, extension 3-leaf for extension by a 3rd leaf, including 2 x carrier plate Perlan 140 KS	130892
Accessories	
Mounting tool for cable riveting for the riveting of the wire cable for Perlan telescopic and Levolan 150 Duosync	134035

GEZE Perlan 140 KS

The sliding door fitting for maximum load

Based on the tried and tested Perlan 140 sliding fitting system, Perlan KS is a high-quality, corrosion resistant product variant for leaves up to 140 kg, which fulfils the standard of the highest corrosion protection class to EN 1670. With it, GEZE also has a quality product for outdoor areas, which can be safely used even in extreme environmental conditions such as sea air or chemical exposure. Just like the standard system Perlan KS can be combined with the complete Perlan accessories range. Perlan KS conforms to all requirements of the relevant standards with regard to static load, fitness for continuous operation, operating force and corrosion resistance.

GEZE Perlan 140 KS

Dwelling house, Santander, Spain (Photo: Pau Esculies)

Application range

- Particularly suitable for automated and manual shading systems for external use
- It can also be combined with Perlan AUT
- For other applications (e.g. in swimming pools), in which increased corrosion protection is required
- All other features according to the Perlan 140 product range

Technical data

Product features	GEZE Perlan 140 KS
Door material	Wood, Plastic, Metal, Glass, Sliding shutters
Leaf weight (max.)	140 kg
Number of leaves	1-leaf, 2-leaf
Corrosion protection class	4
Type of installation	Wall installation, Ceiling installation
Telescope	●
Automated	●
Fixed panel	●

● = YES

Classification to EN 1527:1998

GEZE Perlan 140 KS								
Category of use	Durability	Door weight	Fire resistance	Safety	Corrosion resistance	Security	Category of door	Initial friction
-	6	3	0	-	4	-	1	3

A DESCRIPTION OF THE CLASSES IS GIVEN AT THE END OF THE CATALOGUE.

Standard width in mm

Leaf width (FB)	Track length (L)	Hole spacing (t)	Number of wall and ceiling brackets (x)	Distance from end of track to centre of hole of fixing bracket (y)
500 - 840	1650	350	5	125
500 - 1040	2050	350	6	150
500 - 1240	2450	350	7	175
500 - 1440	2850	350	9	25
500 - 1640	3250	350	10	50
Standard length	6000	350	18	25

Standard installation

Drawing No. 10421-ep05

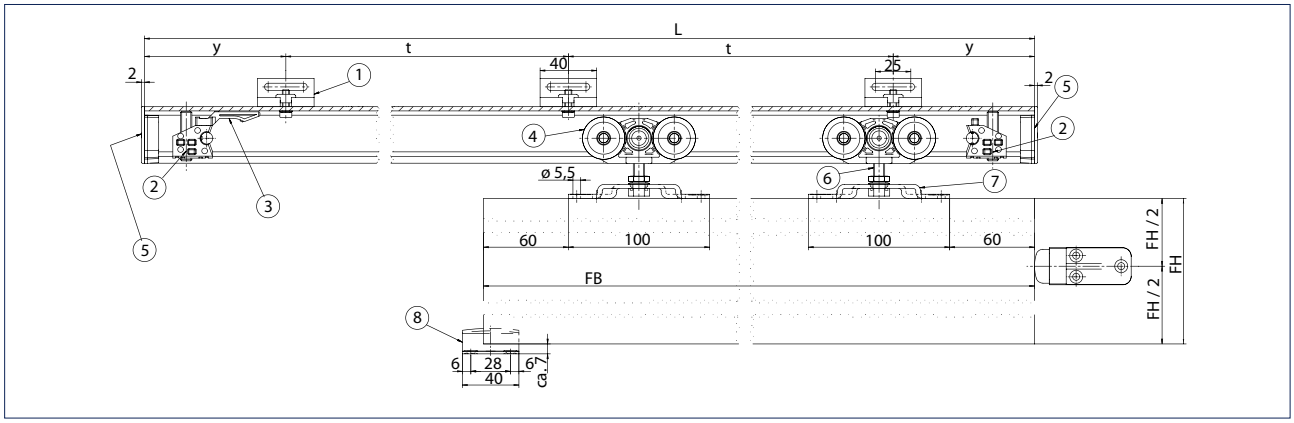

1 = Wall attachment bracket Perlan 140
2 = Tube buffer
3 = Hold-open spring
4 = Double-roller carriage
5 = End cap (optional)
6 = Suspension bolt Perlan 140
7 = Carrier plate
8 = Floor guide
L = Track length
y = Distance end of track to centre of first drilled hole
t = Hole spacing
FB = Leaf width
FH = Leaf height

GEZE Perlan 140 KS - Order information

Description	Leaf width from - to	Length	Version	ID.No.
Accessory set basic components Perlan 140 KS corrosion protection for outdoor use, for ceiling mounting, comprising: 2 x double-roller carriage, 2 x tube buffer, 2 x carrier plate, 1 x hold-open spring, 2 x suspension bolt, 2 x end cap	500 mm 1640 mm			119510
Accessory set basic components Perlan 140 KS corrosion protection for outdoor use, for wall assembly, comprising: 2 x double-roller carriage, 2 x tube buffer, 2 x carrier plate, 1 x hold-open spring, 2 x suspension bolt, 2 x end cap, incl. standard wall bracket (length = usable up to track length)	500 mm 840 mm	1650 mm		119507
	500 mm 1240 mm	2450 mm		119508
	500 mm 1640 mm	3250 mm		119509
Accessories				
Carrier plate Perlan 140 KS corrosion protection, for use outdoors and in aggressive environments, without attachment material			Stainless steel	117355
Wall attachment bracket Perlan 140 KS corrosion protection, for use outdoors and in aggressive environments, with sliding block and fixing screw for track				119319
Double-roller carriage Perlan 140 KS without suspension bolt corrosion protection, for use outdoors and in aggressive environments, up to 140 kg leaf weight				117354
Double-roller carriage Perlan 140 KS with suspension bolt corrosion protection, for use outdoors and in aggressive environments, up to 140 kg leaf weight				120087
Suspension bolt Perlan 140 KS With combination nut			Stainless steel	117357

GEZE Perlan 140 KS, EnBW Biberach (Photo: Nikolaus Grünwald)

GEZE Perlan 140 wall attachment bracket with weather canopy

The wall attachment bracket with weather canopy is used in external areas for fixing sliding shutters. It carries up to three Perlan 140 tracks, safely and reliably. Replaceable angle brackets are also available in three sizes. All parts are made from corrosion-proofed material and are suitable for external use. The maximum load-carrying capacity is 420 kg per metre. This means a maximum leaf weight of 140 kg with three parallel sliding shutters. The tracks can be completely preassembled on the floor with the angle brackets, this largely avoids strenuous overhead work. The system is then simply hung in the previously installed wall profile and is secured with screws. The wall bracket with weather canopy is also available completely assembled on request. All profiles and accessories can also be purchased individually as stock items. Apart from the anodised aluminium and stainless steel like surfaces, on request the cover profile can also be produced in all common RAL colours.

GEZE Perlan 140 wall attachment bracket with weather canopy

GEZE Perlan 140 wall attachment bracket with weather canopy

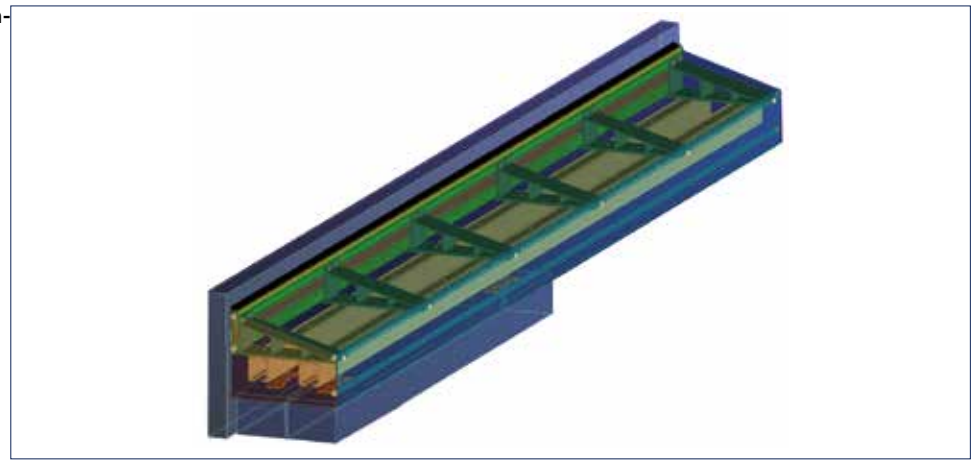

Application range

- For sliding shutters on the exterior
- For 1-3 Perlan 140 tracks
- For 1-3 parallel sliding door elements with up to 140 kg leaf weight
- Suitable as waterproofing for Perlan AUT

Technical data

Product features	GEZE Perlan 140 wall attachment bracket with weather canopy
Door material	Wood, Plastic, Metal, Glass, Sliding shutters
Number of leaves	1-leaf, 2-leaf, 3-flügelig
Type of installation	Wall installation
Telescope	●
Automated	●

● = YES

Wall installation on the exterior

Drawing No. 10421-ep30

Wall bracket and cover:

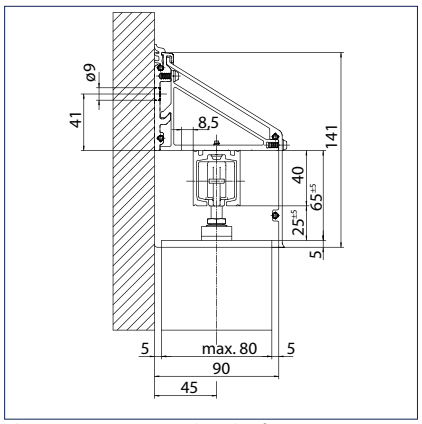

Short variant, example 1-leaf

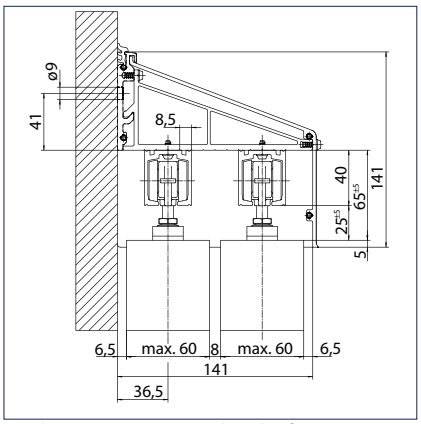

Medium variant, example 2-leaf

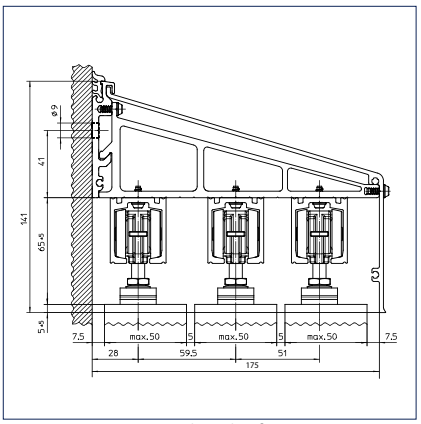

Long variant, example 3-leaf

View without cover:

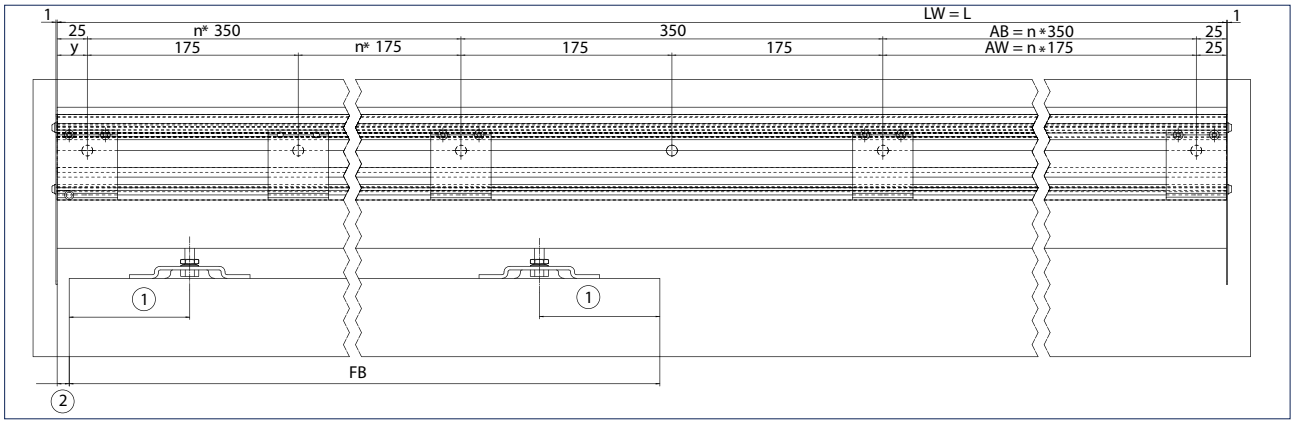

LW = Length of wall attachment profile
L = Track length
AB = Distance fixing bracket
AW = Distance wall installation
1 = Recommendation 100
2 = Recommendation 10
y = Distance end of track to centre of first drilled hole
FB = Leaf width
n = Quantity

View with cover:

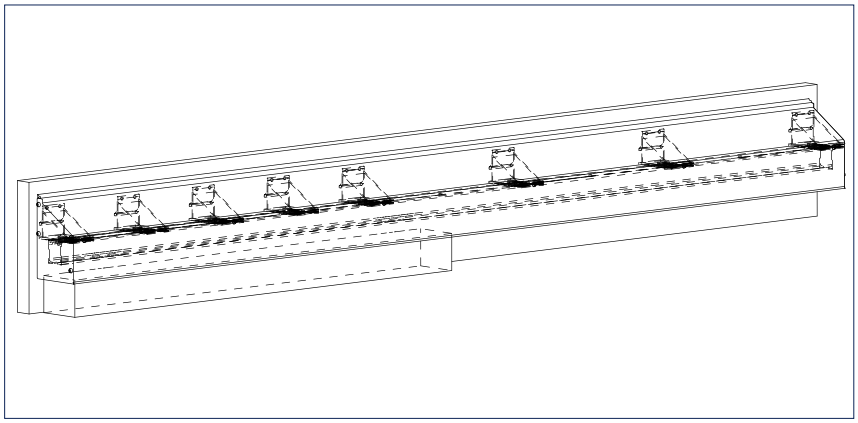

GEZE Perlan 140 wall attachment bracket with weather canopy - Order information

Description	Length	Version	ID.No.
Short cover	6000 mm	EV1	127264
Short cover Customized		EV1	127265
		acc. to RAL	127674
Medium cover	6000 mm	EV1	127266
Medium cover Customized		EV1	127267
		acc. to RAL	127675
Long cover	6000 mm	EV1	127268
Long cover Customized		EV1	127269
		acc. to RAL	127676
Wall attachment profile, perforated	6000 mm	EV1	127259
Wall attachment profile, perforated Customized		EV1	127260
		acc. to RAL	127673
Fixing bracket set, short With attachment screws for ceiling and cover profile		EV1	127320
Fixing bracket set, long With attachment screws for ceiling and cover profile		EV1	127323
Fixing bracket set, medium With attachment screws for ceiling and cover profile		EV1	127322
Wall installation set Perlan 140 configured to customer wishes			127582
Accessories			
Seal wall connection for use with Perlan „concealed wall bracket up to 43 mm“ or „Basic profile wall installation outdoors“	200000 mm	black	127311
Seal wall connection Made to measure, for use with Perlan „concealed wall bracket up to 43 mm“ or basic profile wall installation outdoors		black	127731
End cover set, short 2 pcs., with attachment screws		EV1	127313
		acc. to RAL	127317
End cover set, long 2 pcs., with attachment screws		EV1	127316
		acc. to RAL	127319
End cover set, medium 2 pcs., with attachment screws		EV1	127314
		acc. to RAL	127318

GEZE Perlan 140 bottom guides for sliding shutters

Individual guide variants can be implemented for virtually any application by means of a system consisting of adjustable slider without play and angle brackets in three sizes. With the GEZE M profile, leaves can pass parallel to each other and yet still be safely guided without rattling in their own plane. Their narrow overall width is a particular advantage of the GEZE guides for sliding shutters.

GEZE Perlan 140 bottom guides for sliding shutters

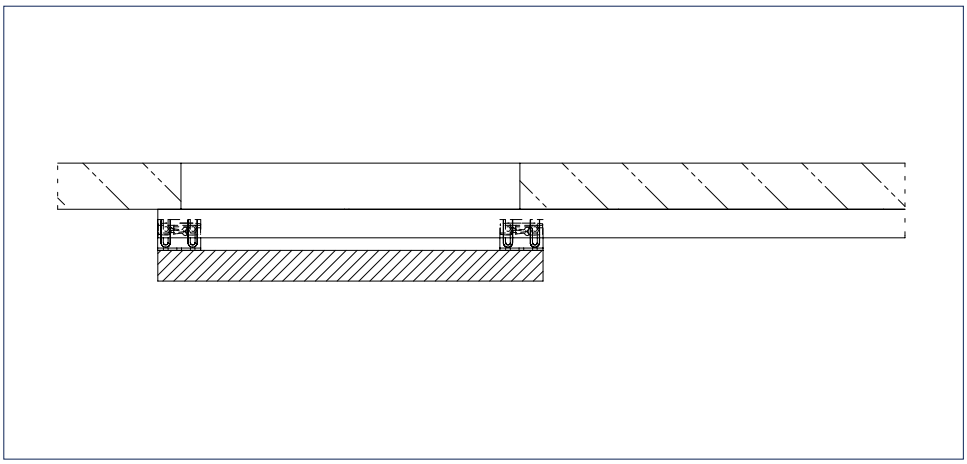

Application range

- For sliding shutters on the exterior
- As a play-free floor guide, is also suitable for indoor use
- For individual guiding, can be adapted to virtually any building situation

Technical data

Product features	GEZE Perlan 140 bottom guides for sliding shutters
Door material	Wood, Plastic, Metal, Sliding shutters
Telescope	•
Automated	•

• = YES

Guide variant examples for wooden leaves
Drawing No. 10421-ep21

M guide profile on façade, fluted angle 40 mm and 100 mm, on leaves, 2-leaf can „overtake“:

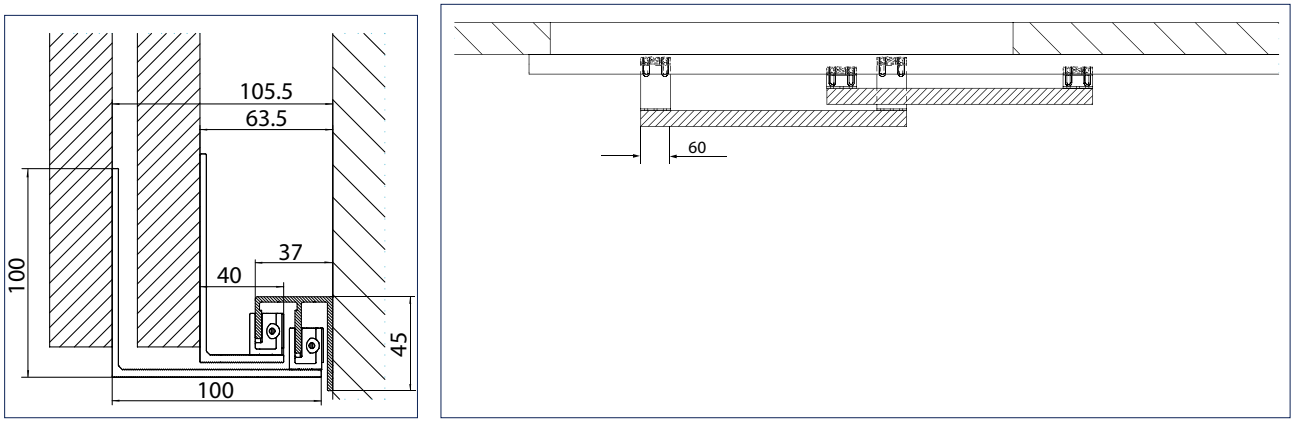

M guide profile on façade, fluted angle 40 mm, on leaf 1-leaf:

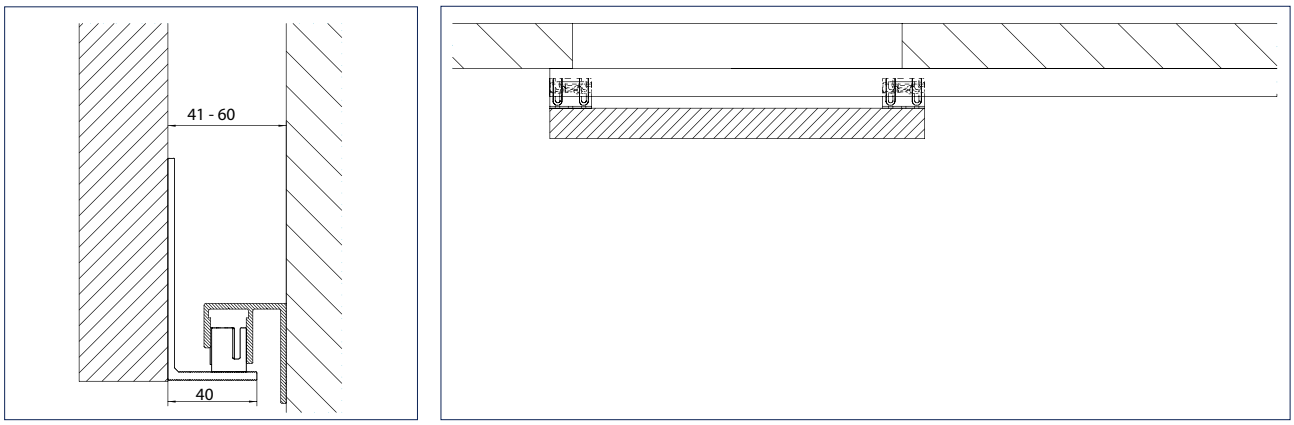

Z guide profile on façade, fluted angle 40 mm on leaf 1-leaf:

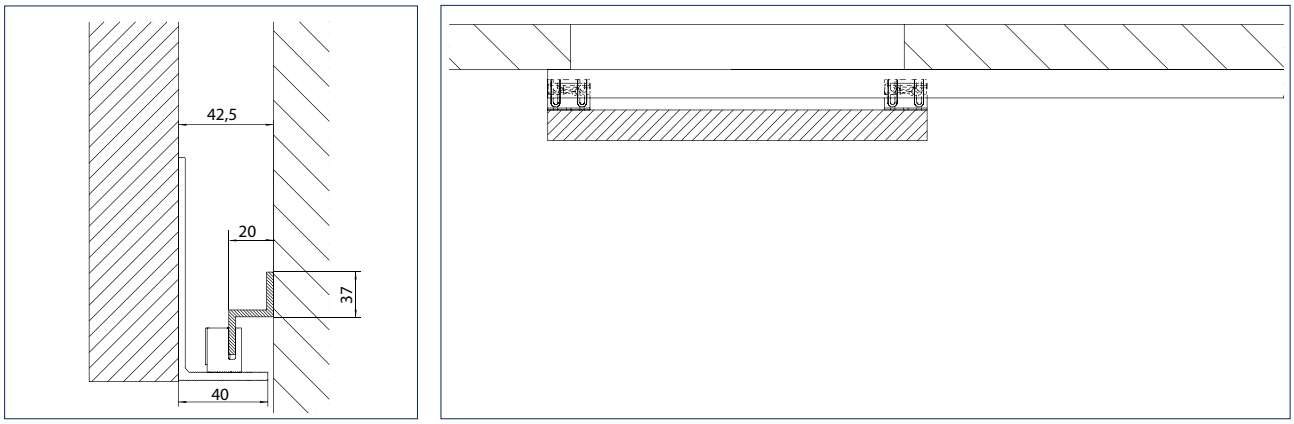

Z guide profile on façade, fluted angle 40 mm and 100 mm, on leaves, 2-leaf:

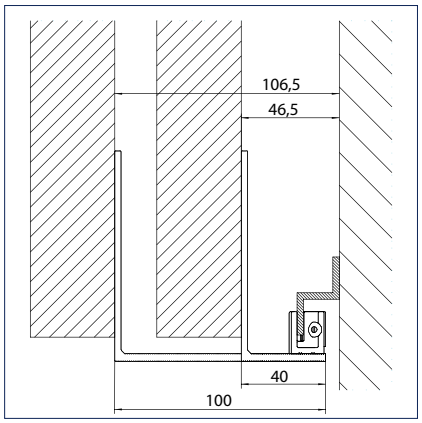

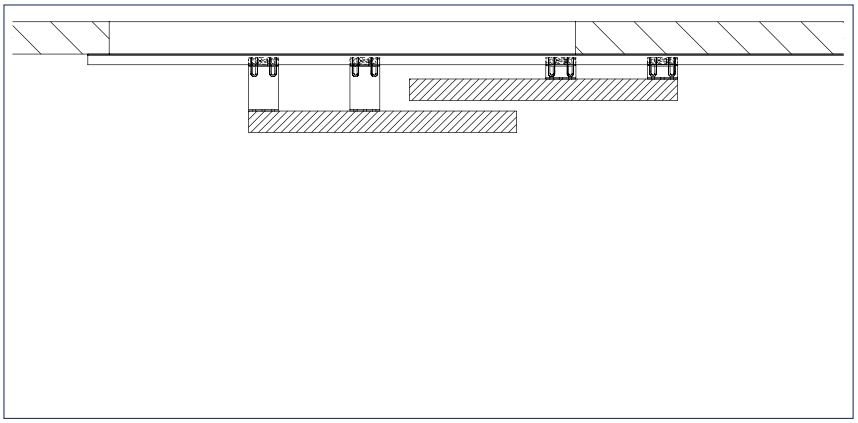

GEZE Perlan 140 bottom guides for sliding shutters - Order information

Description	Length	Version	ID.No.
M shape floor guide	6000 mm	EV1	124661
Continuous Omega shape floor guide	6000 mm	EV1	124640
Clearance-free floor guide With attachment material			123514
Buffer for continuous floor guide			124655
Angled floor guide 100 mm With attachment material			123513
Angled floor guide 40 mm With attachment material			123511
Angled floor guide 60 mm With attachment material			123512

GEZE Perlan AUT 2

The Perlan AUT 2 set allows automation of the manual sliding fitting system Perlan 140 for leaf weights up to 120 kg. A simple and low-cost solution which supports users with the operation of shutter systems and also offers numerous further application options. The Perlan AUT/2 guarantees ease of opening and closing on wall-in wardrobes, on very large leaves and in spots which are difficult to access. It helps to avoid accidents where window shutters are installed at a great height. A synchronous, automated variant can be realised via an additional driver.

GEZE Perlan AUT 2

Application range

- For sliding shutters on the exterior
- For leaf weights up to 120 kg
- For single- or multi-leaf systems in combination with a further toothed belt driver or Perlan telescope
- Suitable for connection to a building system using potential-free actuators

Technical data

Product features	GEZE Perlan AUT 2
Door material	Wood, Plastic, Metal, Glass, Sliding shutters
Leaf weight (max.)	120 kg
Number of leaves	1-leaf, 2-leaf
Type of installation	Wall installation, Ceiling installation
Telescope	●
Automated	●

● = YES

Note
The wall recesses must be made accessible by a removable fascia. The door leaf must be stopped by a further angle buffer – in addition to the tube buffer. The buffer must be attached at the mid door height!

Standard installation
Drawing No. 10421-ep10

Mounting on a 1-leaf sliding door with wooden leaf and carrier plate:

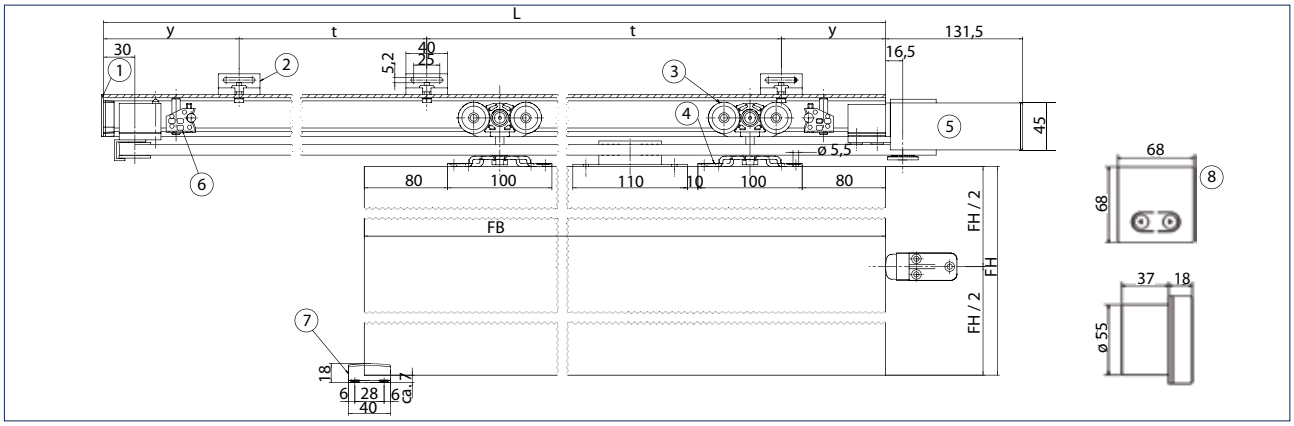

1 = End cap (optional)
2 = Wall attachment bracket Perlan 140
3 = Double-roller carriage
4 = Carrier plate
5 = Drive Perlan AUT 2
6 = Tube buffer
7 = Floor guide
8 = Push button with dead man's control
L = Track length
y = Distance end of track to centre of first drilled hole
t = Hole spacing
FB = Leaf width
FH = Leaf height

Can be fixed directly or with a plate on the ceiling or a bracket on the wall:

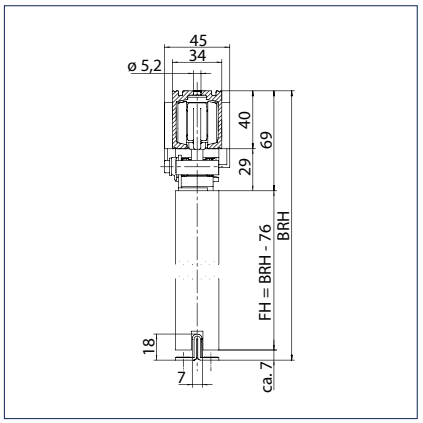

Direct ceiling mounting
FH = Leaf height
BRH = Overall height

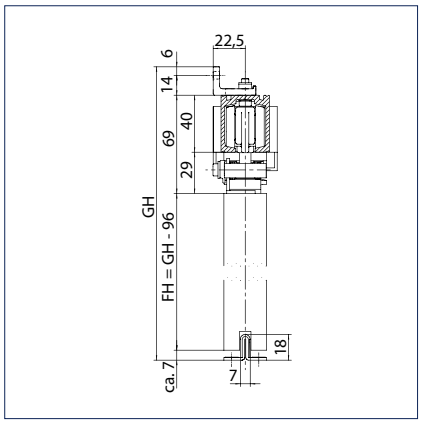

Wall mounting with angle
FH = Leaf height
GH = Total height

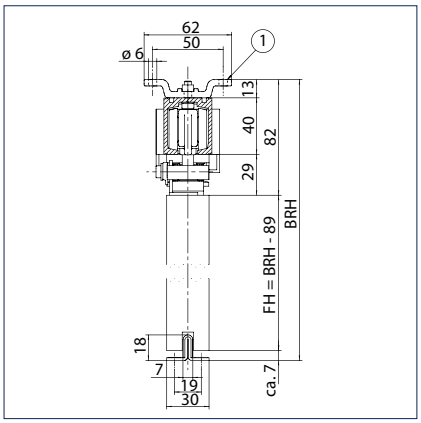

Ceiling installation with plate
FH = Leaf height
BRH = Overall height
1 = Ceiling attachment angle Perlan 140

System components:

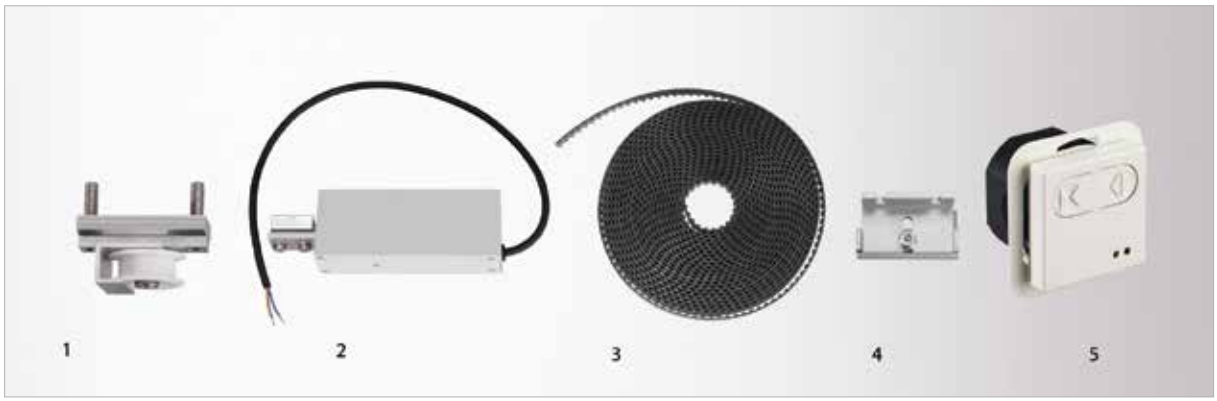

1 = Return pulley
2 = Drive
3 = Toothed belt
4 = Driver with belt coupler
5 = Control /push button

Standard installation on glass leaves
Drawing No. 10421-ep14

Mounting on a 1-leaf sliding door with glass leaf and glass clamping plate:

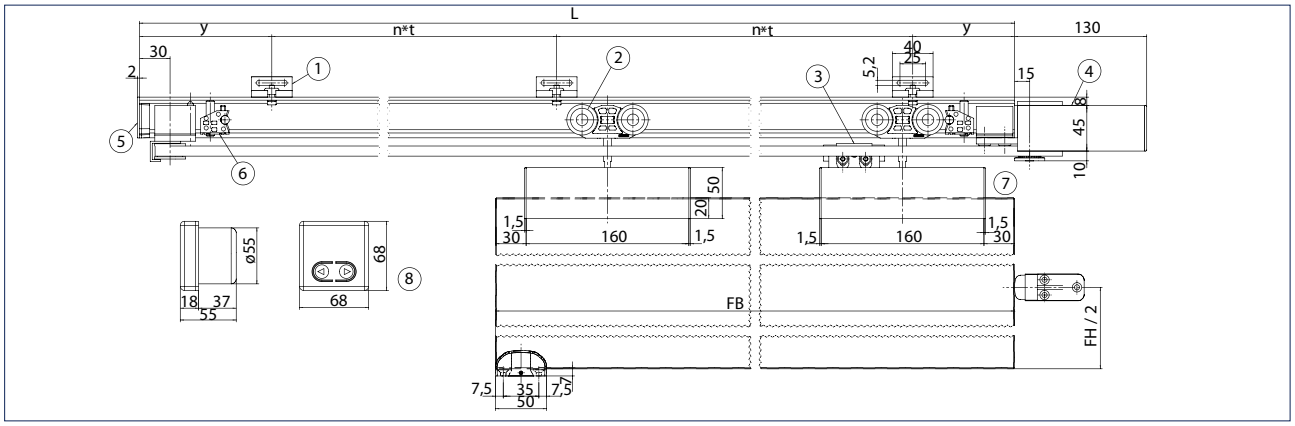

1 = Wall attachment bracket Perlan 140
2 = Double-roller carriage
3 = Glass adapter
4 = Drive Perlan AUT
5 = End cap (optional)
6 = Tube buffer
7 = Glass clamping plate
8 = Push button with dead man's control

L = Track length
y = Distance end of track to centre of first drilled hole
t = Hole spacing
FB = Leaf width
FH = Leaf height
n = Quantity

Can be fixed directly or with a plate on the ceiling or a bracket on the wall:

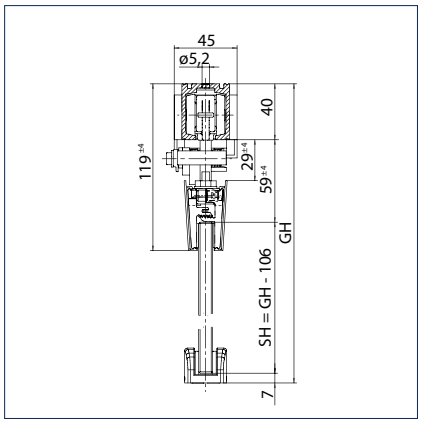

Direct ceiling mounting

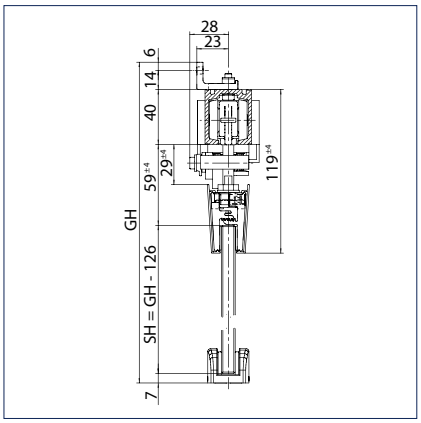

Wall mounting with angle

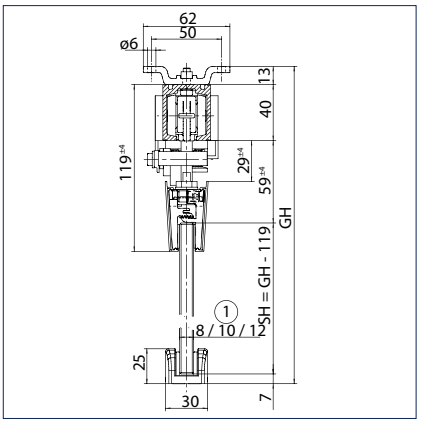

Ceiling installation with plate

SH = Panel height
GH = Total height
GLS= Thickness of glass

Wall installation on the exterior

Drawing No. 10421-ep29

Wall bracket and cover:

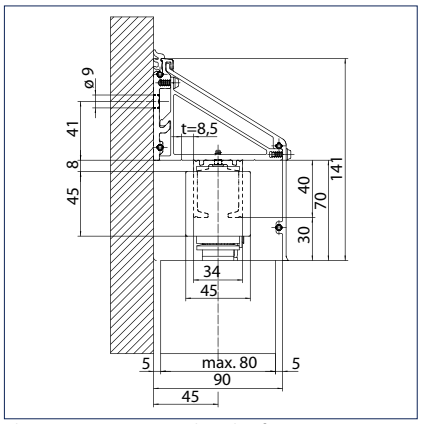

Short variant, example 1-leaf

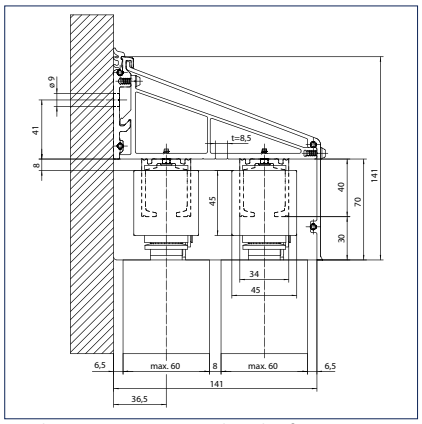

Medium variant, example 2-leaf

View without cover:

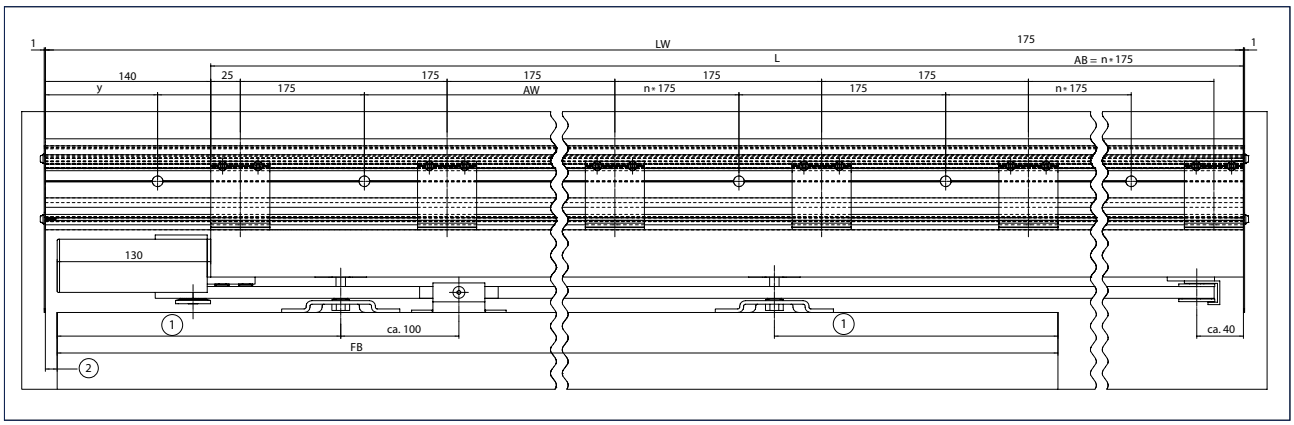

LW = Length of wall attachment profile
L = Track length
AB = Distance fixing bracket
AW = Distance wall installation
FB = Leaf width
1 = Recommendation 240
2 = Recommendation 10
n = Quantity

View with cover:

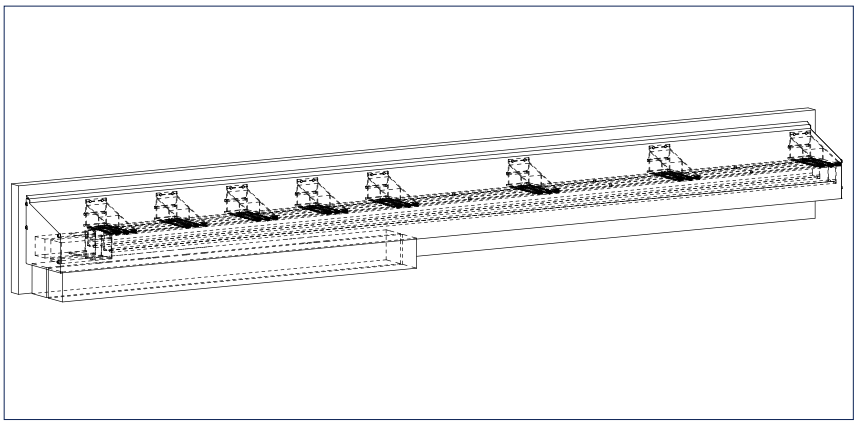

GEZE Perlan AUT 2 - Order information

Description	Length	ID.No.
Perlan AUT 2 set for sliding shutters for the automation of sliding shutters up to 120 kg leaf weight, comprising: 1 x motor, 1 x toothed belt 12.5 m, 1 x driver, wood, 1 x return pulley, 1 x push button incl. control unit		147543
Accessories		
Driver wood for Perlan AUT NT / AUT 2 / Duosync 2, including 2 x extended hanger bolts		134280
Perlan AUT additional switch (without control)		126181
Perlan AUT-NT / AUT 2 toothed belt	78000 mm	141500
Custom-made Perlan AUT-NT / AUT 2 toothed belt		141561

GEZE Perlan AUT 2 (Photo: Studio BE)

GEZE Perlan AUT-NT

The new and simple type of sliding door automation

GEZE Perlan AUT-NT is a simple, elegant and yet cost-effective solution for the automation of lightweight sliding doors for interior use – naturally with all the convenient functions of a full automatic door. The Push&Go function, which automatically starts the drive if the door leaf is lightly pushed, offers convenient operation. The opening speed of up to 0.3 m/s maximum and the gentle start-up and braking of the drive provide increased convenience. Various types of operating enable adaptation to individual user's wishes. Perlan AUT-NT moves the door almost silently, as it produces hardly any disruptive running noises. The drive fulfils all requirements for low energy operation to DIN 18650, as the door moves with reduced force. This removes the need for safeguarding with additional safety sensors. If there is a power failure, the door can be opened by hand and can therefore also be safely accessed in an emergency. Perlan AUT-NT is suitable for wooden and glass doors and can be used with the standard accessories of the Perlan 140 roller sliding door fitting system in virtually any installation system and on any door leaf. Perlan AUT-NT can be adapted to all leaf widths from 500 to 3000 mm, either as a standard set or flexibly assembled on the construction site.

GEZE Perlan AUT-NT

Application range

- Low energy sliding door drive in accordance with DIN 18650
- For the automation of lightweight internal doors up to 80 kg
- For all single- and multiple-leaf sliding doors
- Maximum settable speed up to 0.3 m/s
- Particularly well suited for doors in living and office spaces

Technical data

Product features	GEZE Perlan AUT-NT
Door material	Wood, Plastic, Metal, Glass
Leaf weight (max.)	80 kg
Number of leaves	1-leaf, 2-leaf
Type of installation	Wall installation, Ceiling installation
Automated	●
Fixed panel	●

● = YES

Mounting on wooden door, 1-leaf
Drawing No. 10421-ep-53

Mounting on wooden door, 2-leaf
Drawing No. 10421-ep-54

Mounting on glass door, 1-leaf
Drawing No. 10421-ep-55

Mounting on glass door, 2-leaf
Drawing No. 10421-ep-56

Example:

Mounting on a 1-leaf sliding door with wooden leaf and carrier plate:

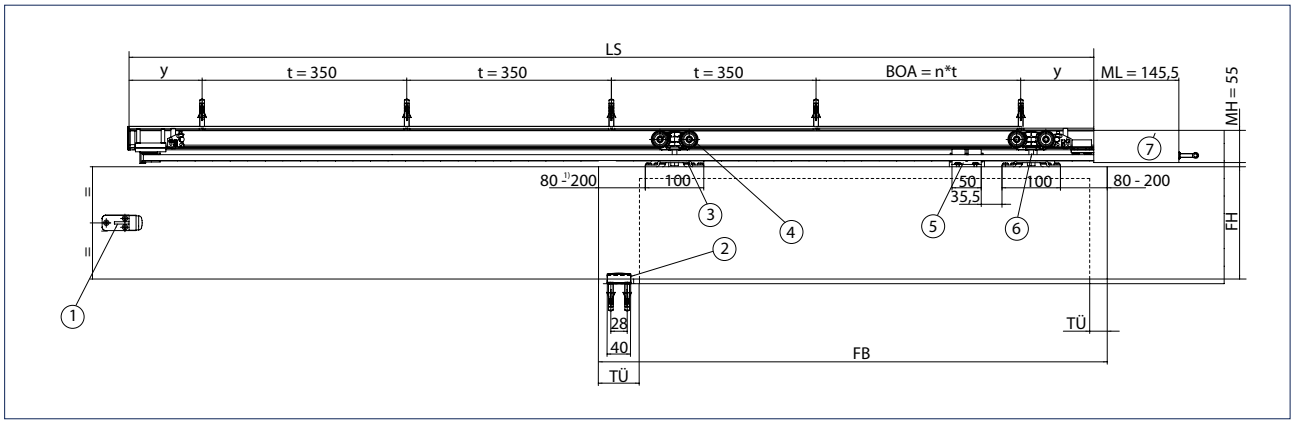

1 = Optional angle buffer
2 = Floor guide
3 = Carrier plate
4 = Double-roller carriage without suspension bolt
5 = Belt coupler set
6 = Track length
7 = Drive unit
LS = Track length
y = Distance end of track to centre of first drilled hole
t = Hole spacing
n = Quantity
BOA = Drilled hole distance
ML = Motor length
MH = Motor height
TÜ = Door protrusion
1) = Recommendation

Can be fixed directly or with a plate on the ceiling or a bracket on the wall:

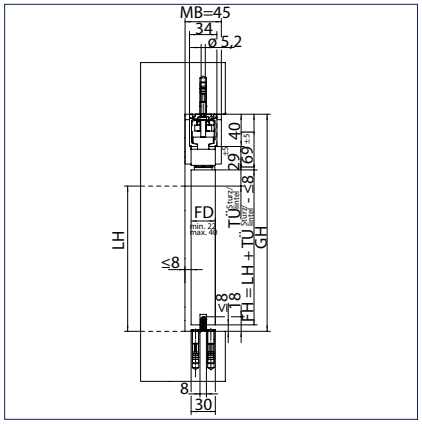

Direct ceiling mounting

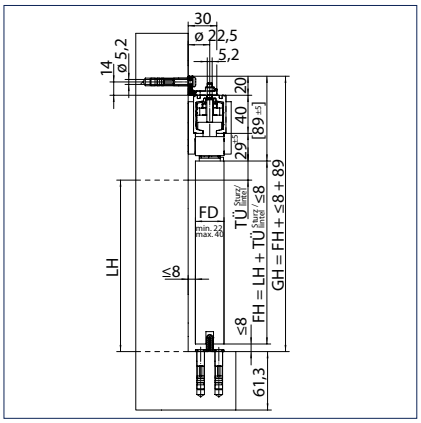

Wall mounting with angle

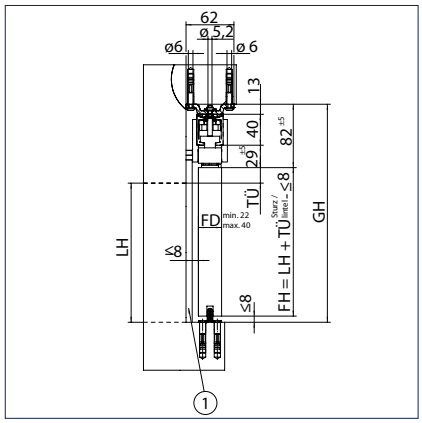

Ceiling mounting with ceiling attachment angle

MBR = Motor width
LH = Clear height
FD = Leaf thickness
FH = Leaf height
TÜ = Door protrusion
GH = Total height
1 = Framework construction on-site

GEZE Perlan AUT-NT - Order information

Description	Length	ID.No.
Perlan AUT-NT set for wooden leaves For automating 1 or 2-leaf Perlan sliding doors up to 80 kg leaf weight. Set comprising: 1 x control unit with push button, 1 x power supply, 1 x drive unit with 2.5 m control cable, 1 x return pulley, 1 x driver for leaf, toothed belt 12.5 m Additional driver required for 2-leaf doors		139924
Perlan AUT-NT set for glass leaves For automating 1 or 2-leaf Perlan sliding doors up to 80 kg leaf weight. Set comprising: 1 x control unit with push button, 1 x power supply, 1 x drive unit with 2.5 m control cable, 1 x return pulley, 1 x driver for glass clamping plate 45 mm, toothed belt 12.5 m Additional driver required for 2-leaf doors		139925
Accessories		
Driver glass clamping plate 30 mm for Perlan AUT NT + Duosync 2, including 2 x extended suspension bolts		143295
Driver glass clamping plate 45 mm for Perlan AUT NT + Duosync 2, including 2 x extended suspension bolts		134281
Driver wood for Perlan AUT NT / AUT 2 / Duosync 2, including 2 x extended hanger bolts		134280
Perlan AUT-NT drive unit		139992
Perlan AUT-NT motor cable	100000 mm	141440
Custom-made Perlan AUT-NT motor cable		141452
Perlan AUT-NT / AUT 2 toothed belt	78000 mm	141500
Custom-made Perlan AUT-NT / AUT 2 toothed belt		141561
Perlan AUT-NT power supply		139994
Perlan AUT-NT deflection pulley		140174
Perlan AUT-NT set containing control unit with push button		141151

GEZE Perlan AUT-NT (Photo: Studio BE)

GEZE Levolan 60

Sophisticated universal fitting for all types of leaves

With the compact Levolan 60 sliding door system, GEZE has created a new sophisticated solution to design easy-to-use, manual sliding doors for interior use. Small fitting dimensions and the linear design with a slim, 50 mm high track suit every installation situation. The sophisticated fitting technology can be used for door leaf weights of up to 60 kg. The integration of the complete fitting parts in the track optimises the overall design and makes fast and straightforward commissioning possible. The fast and straightforward installation of fittings from the front using only a single installation tool is a particular advantage. The integrated GEZE Levolan SoftStop draw-in damping integrated in the track gives additional safety and convenience: The sliding door leaves are guided gently and safely into the end position, With no more banging into the frame or buffer. The risk of fingers being trapped is almost totally excluded. All visible parts are available in the finishes silver-coloured EV1, stainless steel colour or RAL.

GEZE Levolan 60

Application range

- For glass elements ESG (toughened safety glass) 8, 10 and 12 mm as well as laminated safety glass up to 10 mm (with additional VSG kit) and wooden leaves up to a weight of 60 kg
- For all single- and multiple-leaf sliding doors
- With or without fixed panel
- For wall, ceiling and glass attachment

Technical data

Product features	GEZE Levolan 60
Door material	Glass, Wood, Plastic, Metal
Leaf weight (max.)	60 kg
Corrosion protection class	3
Type of installation	Wall installation, Ceiling installation, Glass clamp
Fixed panel	●
Draw-in damping	●

● = YES

Classification to EN 1527:1998

GEZE Levolan 60								
Category of use	Durability	Door weight	Fire resistance	Safety	Corrosion resistance	Security	Category of door	Initial friction
-	6	2	0		3		1	3

A DESCRIPTION OF THE CLASSES IS GIVEN AT THE END OF THE CATALOGUE.

Planning drawings

Drawing No. 10901-pl-01 + 10901-pl-02 (with fixed panel) + 10901-pl-03 (vertical sections)

A = Wall installation with recessed handle

B = Wall installation with pull handle

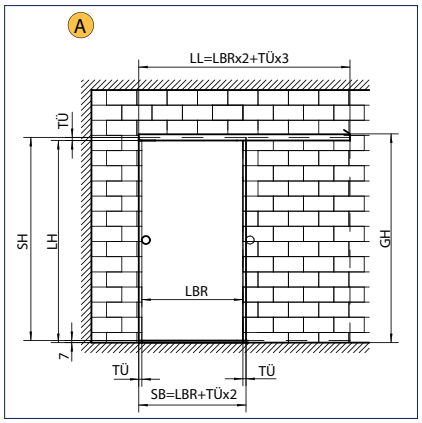

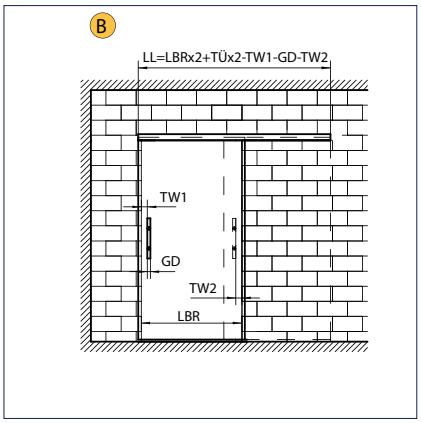

Dimensioning as with A

LL = Track length
LBR = Clear width
TÜ = Door protrusion
SH = Panel height
LH = Clear height
SB = Panel width
TW1 = Door handle - wall clearance (door closed)
TW2 = Door handle - wall clearance (door opened)
GD = Diameter of handle bar

C = Ceiling installation with recessed handle

D = ceiling installation with pull handle

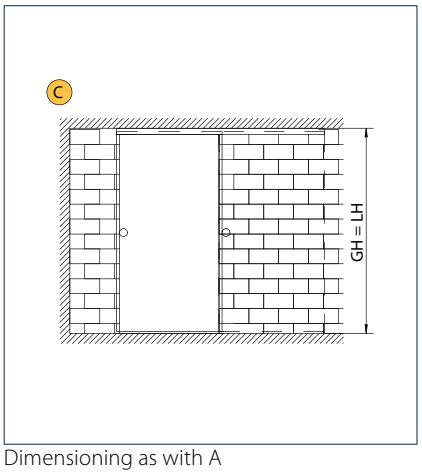

Dimensioning as with A

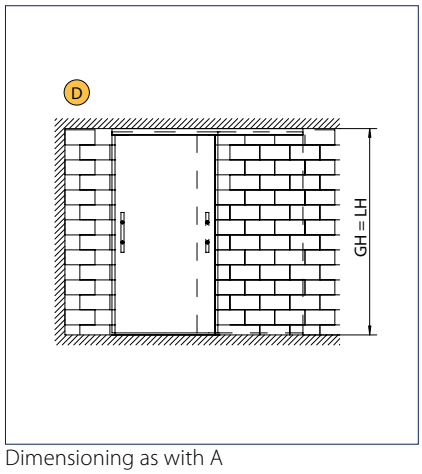

Dimensioning as with A

GH = Total height
LH = Clear height

E = Levolan with fixed panel and recessed handle

F = Levolan with fixed panel and pull handle

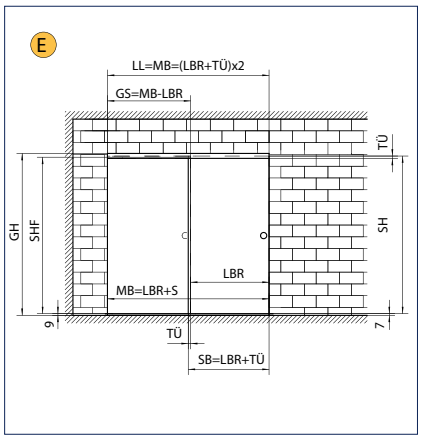

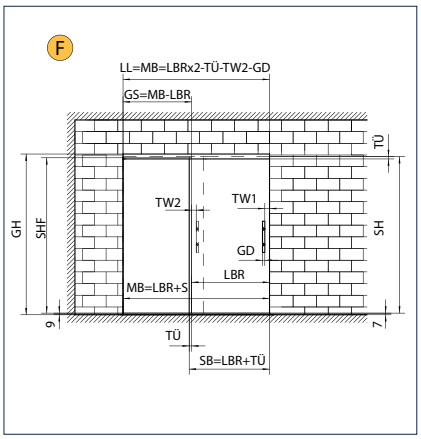

LL = Track length
MB = Wall opening width
LBR = Clear width
TÜ = Door protrusion
GS = Glass width side part
GH = Total height
SHF = Panel height fixed panel
SH = Panel height
SB = Panel width
TW1 = Door handle - wall clearance (door closed)
TW2 = Door handle - wall clearance (door opened)
GD = Diameter of handle bar

Wall mounting with glass leaf

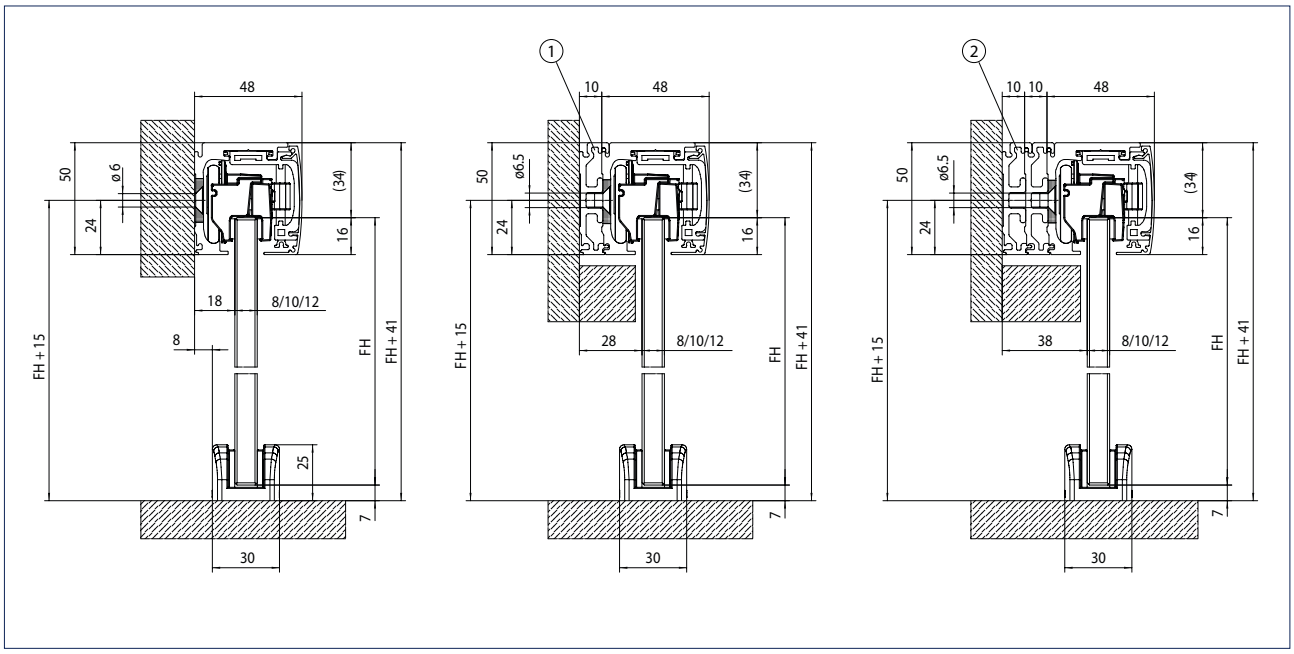

1 = Frame offset 10 mm
2 = Frame offset 20 mm
FH = Leaf height

Wall mounting with wooden leaf

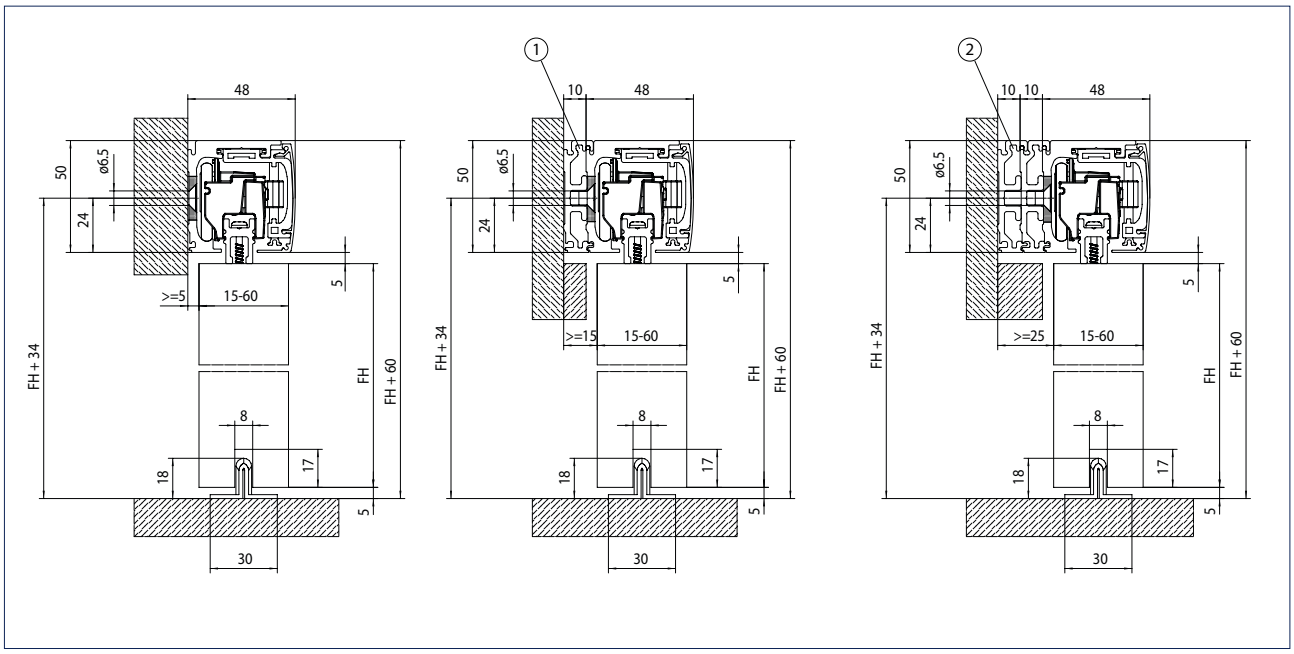

1 = Frame offset 10 mm
2 = Frame offset 20 mm
FH = Leaf height

Ceiling mounting

Glass leaf

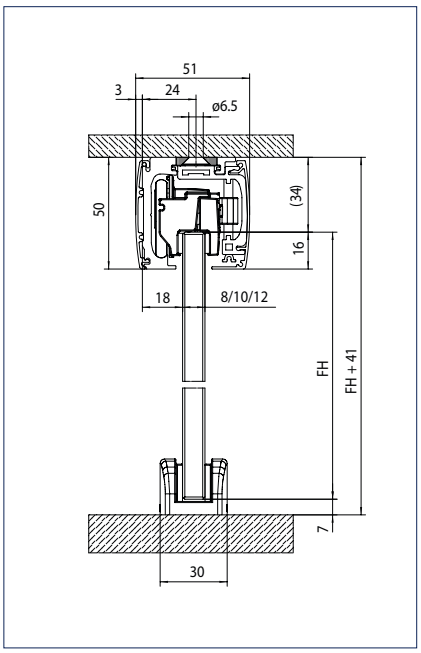

FH = Leaf height

Wooden leaf

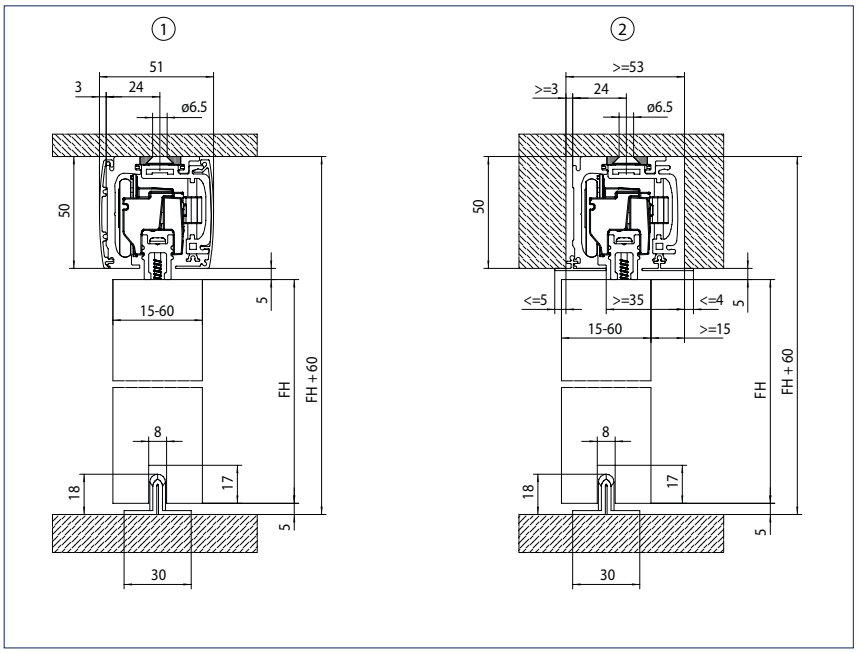

1 = Wooden leaf, central
2 = Wooden leaf, offset
FH = Leaf height

Glass leaf with fixed panel

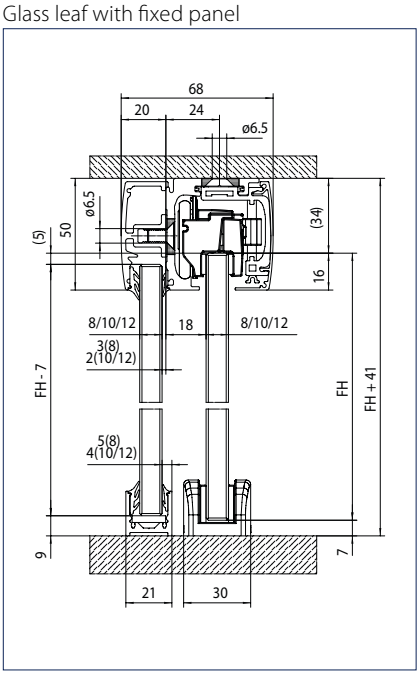

FH = Leaf height

Glass clamp

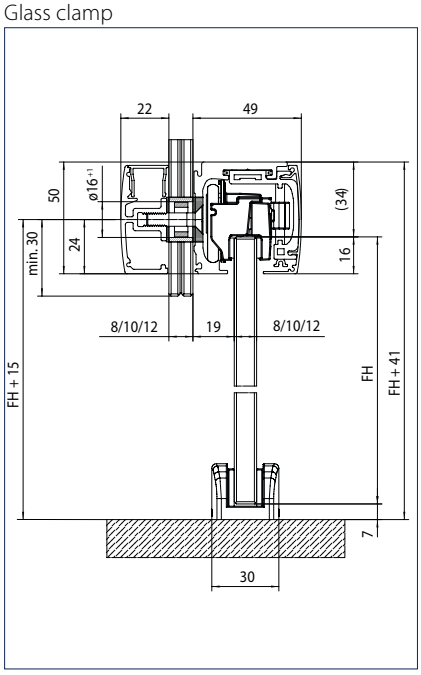

FH = Leaf height

Standard mounting

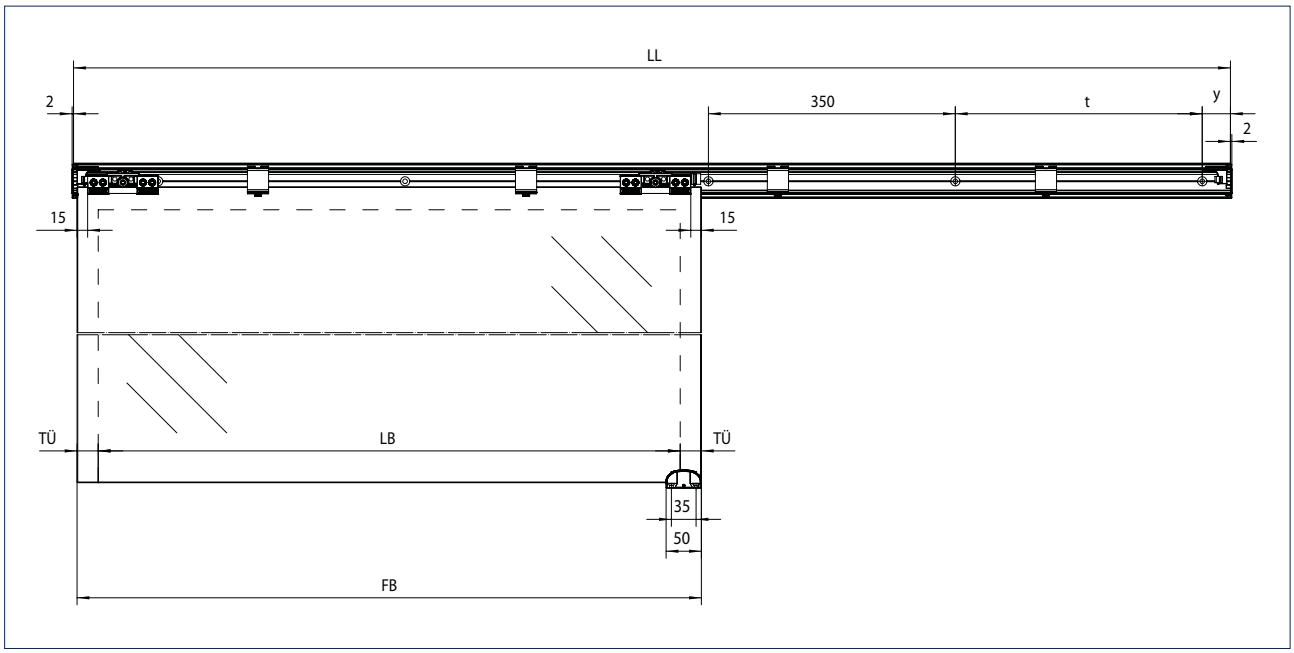

LL = Track length
LB = Clear width
TÜ = Door clearance
FB = Leaf width
FH = Leaf height
y = Distance end of track to centre of first drilled hole
t = Hole spacing

GEZE Levolan 60 (Photo: Lazaros Filoglou)

GEZE SLIDING DOOR SYSTEMS

Description	Leaf width from - to	Length	Version	ID.No.
Levolan 60 complete set for wall assembly	400 mm 840 mm	1650 mm	EV1	147164
	400 mm 1040 mm	2050 mm	EV1	147165
	400 mm 1240 mm	2450 mm	EV1	147166
	400 mm 840 mm	1650 mm	stainless steel colour	147167
	400 mm 1040 mm	2050 mm	stainless steel colour	147168
	400 mm 1240 mm	2450 mm	stainless steel colour	147169
Levolan 60 complete set configured to customer wishes				147170
Accessories				
Back cover profile set for Levolan 60 for facing the back for ceiling installation, with end covers and round cord		1650 mm	EV1	147221
		2050 mm	EV1	147222
		2450 mm	EV1	147223
		1650 mm	stainless steel colour	147224
		2050 mm	stainless steel colour	147225
		2450 mm	stainless steel colour	147226
Set of additional profiles for fixed panel Levolan 60 as add-on profile for creating a fixed panel at the side, comprising: Additional profile, cover profile for free fixed panel area, glass seal 12 m, U-profile 1.5 m, end cover U-profile incl. glass supports, attachment set for fixed panel		1650 mm	EV1	147227
		2050 mm	EV1	147228
		2450 mm	EV1	147229
		1650 mm	stainless steel colour	147230
		2050 mm	stainless steel colour	147231
		2450 mm	stainless steel colour	147232
Levolan 60 track for ceiling and wall installation		1650 mm	EV1	145487
		2050 mm	EV1	145488
		2450 mm	EV1	145489
		6000 mm	EV1	145490
		1650 mm	stainless steel colour	145541
		2050 mm	stainless steel colour	145542
		2450 mm	stainless steel colour	145543
		6000 mm	stainless steel colour	145544
Levolan 60 track configured to customer wishes				145545
Roller carriage set Levolan 60 2 pcs., up to 60 kg leaf weight, including clamping inserts for 8-12 mm ESG and 2 hold-open springs				146148
Trim bracket set with end buffer Levolan 60 for attachment of the front cover profile, comprising: 6 trim brackets, 2 end buffers (left + right)				146146
Front cover profile Levolan 60 for facing the front for wall and ceiling mounting		1650 mm	EV1	145547
		2050 mm	EV1	145548
		2450 mm	EV1	145549
		6000 mm	EV1	145550
		1650 mm	stainless steel colour	145551
		2050 mm	stainless steel colour	145552
		2450 mm	stainless steel colour	145553
		6000 mm	stainless steel colour	145554

Description	Leaf width from - to	Length	Version	ID.No.
Front cover profile Levolan 60 configured to customer wishes				145555
Back cover profile Levolan 60 for facing the back for ceiling mounting		1650 mm	EV1	145598
		2050 mm	EV1	145599
		2450 mm	EV1	145600
		6000 mm	EV1	145611
		1650 mm	stainless steel colour	145612
		2050 mm	stainless steel colour	145613
		2450 mm	stainless steel colour	145614
		6000 mm	stainless steel colour	145615
Back cover profile Levolan 60 configured to customer wishes				145616
Round cord set Levolan 60 for attaching the back cover profile and the spacer profile for frame offset				148091
Set of end covers Levolan 60 for wall mounting, fixed panel, glass attachment			EV1	146341
			black	146343
			stainless steel colour	146342
			acc. to RAL	146344
Set of end covers Levolan 60 for ceiling mounting			EV1	146345
			black	146347
			stainless steel colour	146346
			acc. to RAL	146348
Cover profile for recessed / ceiling flush installation Levolan 60 for facing the underside of the Levolan 60 for installation flush to the ceiling (identical on both sides)		1650 mm	EV1	147568
		2050 mm	EV1	147569
		2450 mm	EV1	147570
		6000 mm	EV1	147601
		1650 mm	stainless steel colour	147602
		2050 mm	stainless steel colour	147603
		2450 mm	stainless steel colour	147604
		6000 mm	stainless steel colour	147605
Cover profile for recessed / ceiling flush installation Levolan 60 configured to customer wishes				147606
Additional profile for fixed panel / glass attachment for Levolan 60 as add-on profile for creating a fixed panel at the side or for attachment of the Levolan 60 to a glass skylight		1650 mm	EV1	146297
		2050 mm	EV1	146298
		2450 mm	EV1	146299
		6000 mm	EV1	146300
		1650 mm	stainless steel colour	146301
		2050 mm	stainless steel colour	146302
		2450 mm	stainless steel colour	146303
		6000 mm	stainless steel colour	146304
Additional profile for fixed panel / glass attachment for Levolan 60 configured to customer wishes				146305
Set of attachment material for glass Levolan 60 for attachment of the additional profile through a glass pane on the track, including glass lead-through sleeves				146362
Set of attachment material for fixed panel Levolan 60 for attachment of the fixed panel add-on profile on the track				147163
Cover profile fixed panel for Perlan 140 / Levolan 60 for facing the fixed panel area not used with Perlan 140 / Levolan 60 as well as for top covering with glass installation Levolan 60		6000 mm	EV1	127003
		6050 mm	stainless steel colour	128342

GEZE SLIDING DOOR SYSTEMS

Description	Leaf width from - to	Length	Version	ID.No.
Cover profile fixed panel for Perlan 140 / Levolan 60 Customized			EV1	128078
			stainless steel colour	128343
U-profile Perlan, Levolan fixed panel		6000 mm	EV1	126965
		6050 mm	stainless steel colour	128294
U-profile Perlan, Levolan fixed panel Customized			EV1	128076
			stainless steel colour	128295
End cover set with 2 x glazing supports for use with U-profile fixed panel on Perlan / Levolan systems			EV1	127001
			stainless steel colour	128361
Glass seal for Perlan / Levolan fixed panel for 8 / 10 / 12 mm glass thickness		12000 mm	grey	126869
Spacer profile for frame offset Levolan 60 10 mm additional space, can be stacked up to 20 mm		1650 mm	EV1	147555
		2050 mm	EV1	147556
		2450 mm	EV1	147557
		6000 mm	EV1	147558
		1650 mm	stainless steel colour	147559
		2050 mm	stainless steel colour	147560
		2450 mm	stainless steel colour	147571
		6000 mm	stainless steel colour	147572
Spacer profile for frame offset Levolan 60 configured to customer wishes				147573
Clamping profile for attaching wooden/metal leaves for the attachment of door leaves made of wood / metal / plastic to Levolan 60 / 150		1000 mm	EV1	146957
		1500 mm	EV1	146958
Clamping profile for attaching wooden/metal leaves Customized			EV1	146959
Set VSG glued fixing for use with VSG glass in connection with Levolan 60, WITHOUT adhesive				148092
Glass/metal bonding set 5x1 g for up to 5 doors				133056
Glass/metal bonding set 50 g for up to 30 doors				133039
Adjustable glass floor guide Variable adjustment for glass thickness 8-13,5 mm, with silencing guide with structured glass surfaces, without attachment material			silver-coloured	120417
			stainless steel colour	148019
			acc. to RAL	149657
Stainless steel floor guide For 8, 10, 12 mm glass			Stainless steel	134990
Floor guide wood standard Without attachment material			galvanised	002191
Flush pull, 15-80 mm wood Outer diameter 60 mm, specify leaf thickness when ordering			Stainless steel	127614
Flush pull, 8-12 mm glass Closed, outer diameter 60 mm, glass drill hole 40 mm			Stainless steel	138670
Flush pull, 8-12 mm glass Open, outer diameter 70 mm, glass drill hole 60 mm, specify glass thickness when ordering			Stainless steel	127617
Door pull handle, configured			Stainless steel	127616

GEZE Levolan 60 SoftStop

Strong design – gently damped

With the GEZE Levolan 60 SoftStop, the variant with draw-in damping, sliding elements up to 60 kg can be realised without additional leaf processing. Sliding doors made of glass, wood, metal and plastic can be realised without any effort. The height adjustment of the door leaf via an eccentric fitting on the roller carriage permits the fast and optimum adaptation of the sliding door to all structural situations. The smooth-running rollers and roller carriages guarantee maximum sliding comfort and a long life span. The optional GEZE Levolan 60 draw-in damping guarantees additional safety and comfort. A damping feature gently brakes the closing movement of the door about 10 cm before the end of the guide rail. The door leaves are then automatically guided gently and safely into the end position, With no more banging into the frame or buffer. The risk of fingers being trapped is practically excluded. The GEZE Levolan 60 SoftStop is retro-fittable and adapts the sliding door to changing user requirements e.g. for children or the elderly. Two-sided draw-in damping is available for Levolan 60 SoftStop even for slim door leaf widths from 770 mm.

GEZE Levolan 60 SoftStop

Application range

- For glass elements ESG (toughened safety glass) 8, 10 and 12 mm as well as laminated safety glass up to 10 mm (with additional VSG kit) and wooden leaves up to a weight of 60 kg
- For all single- and multiple-leaf sliding doors
- Damped on one or both sides
- Quiet running makes it particularly well suited for doors in living and office spaces

Technical data

Product features	GEZE Levolan 60 SoftStop
Door material	Glass, Wood, Plastic, Metal
Number of leaves	1-leaf, 2-leaf
Type of installation	Wall installation, Ceiling installation, Glass clamp
Fixed panel	●
Draw-in damping	●

● = YES

Draw-in damping on one side

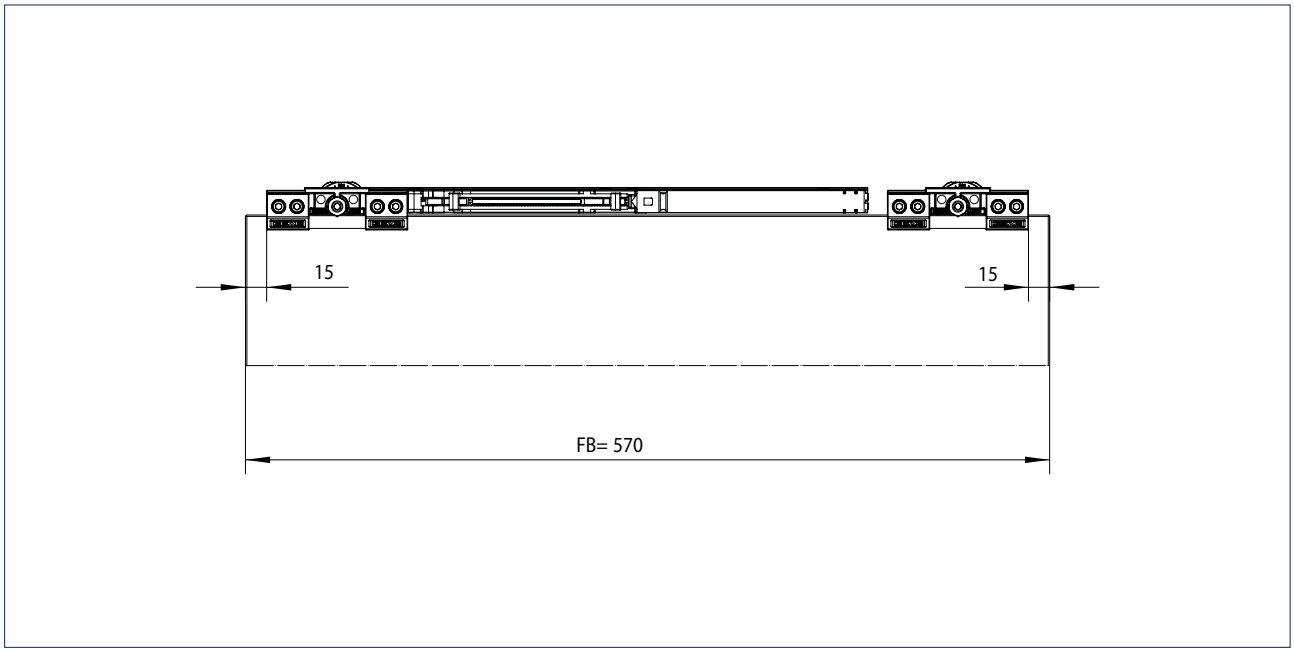

FB = Leaf width

Draw-in damping on both sides

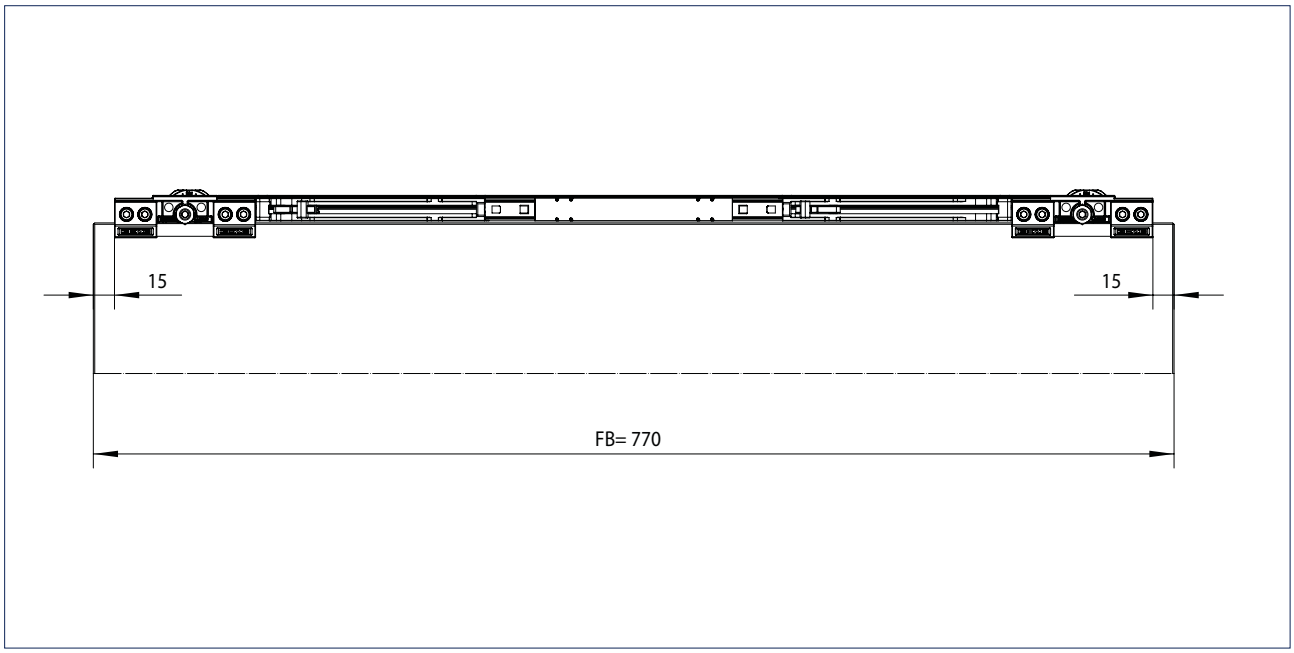

FB = Leaf width

GEZE Levolan 60 SoftStop - Order information

Description	Leaf width from - to	ID.No.
Levolan 60 SoftStop set, dampening on one side, up to 60 kg for draw-in damping on the left, comprising: 1 x damping unit, 1 x mount for roller carriage, 1 x actuator, also retro-fittable - minimum leaf width 570 mm	570 mm 1240 mm	146370
Levolan 60 SoftStop set, dampening on one side, up to 60 kg for draw-in damping on the right, comprising: 1 x damping unit, 1 x mount for roller carriage, 1 x actuator, also retro-fittable - minimum leaf width 570 mm	570 mm 1240 mm	146401
Levolan 60 SoftStopDuo, dampening on both sides, up to 60 kg for draw-in damping on the left & right, comprising: 1 x double damping unit, 2 x mount for roller carriage, 2 x actuator, also retro-fittable - minimum leaf width 770 mm	770 mm 1240 mm	146402

GEZE Levolan 150

The design fitting for all-glass and wooden sliding doors

With its compact dimensions, GEZE Levolan 150 offers a virtually invisible clamp fitting for single, multi-leaf and synchronous all-glass and wooden doors. The leaf is guided directly in the fitting – the suspension parts are therefore virtually invisible, additional covers are not required. The linear design adapts to the design of any environment. The track is only 63 mm high, clamping jaws enable the installation of glass and wooden elements without the need to machine or work the glass. The high-quality bearings and maintenance-free running gear ensure that easy and smooth running movement of the glass elements with little applied force. All visible parts are available with silver coloured anodised aluminium or stainless steel coloured surfaces.

GEZE Levolan 150

Application range

- For ESG 8, 10 and 12 mm glass elements as well as VSG up to 12.76 mm (with additional VSG kit) up to a weight of 150 kg
- For all single, multi-leaf and synchronous sliding doors
- With or without fixed panel
- For wall and ceiling installation
- Can even be installed in confined spaces

Technical data

Product features	GEZE Levolan 150
Door material	Glass, Wood
Leaf weight (max.)	150 kg
Number of leaves	1-leaf, 2-leaf
Corrosion protection class	2
Type of installation	Wall installation, Ceiling installation
Fixed panel	●
Draw-in damping	●

● = YES

Classification to EN 1527:1998

GEZE Levolan 150								
Category of use	Durability	Door weight	Fire resistance	Safety	Corrosion resistance	Security	Category of door	Initial friction
-	6	3	0	-	2	-	1	3

A DESCRIPTION OF THE CLASSES IS GIVEN AT THE END OF THE CATALOGUE.

For planning drawings see the Levolan 60 section

Wall assembly
Drawing No. 10901-ep01

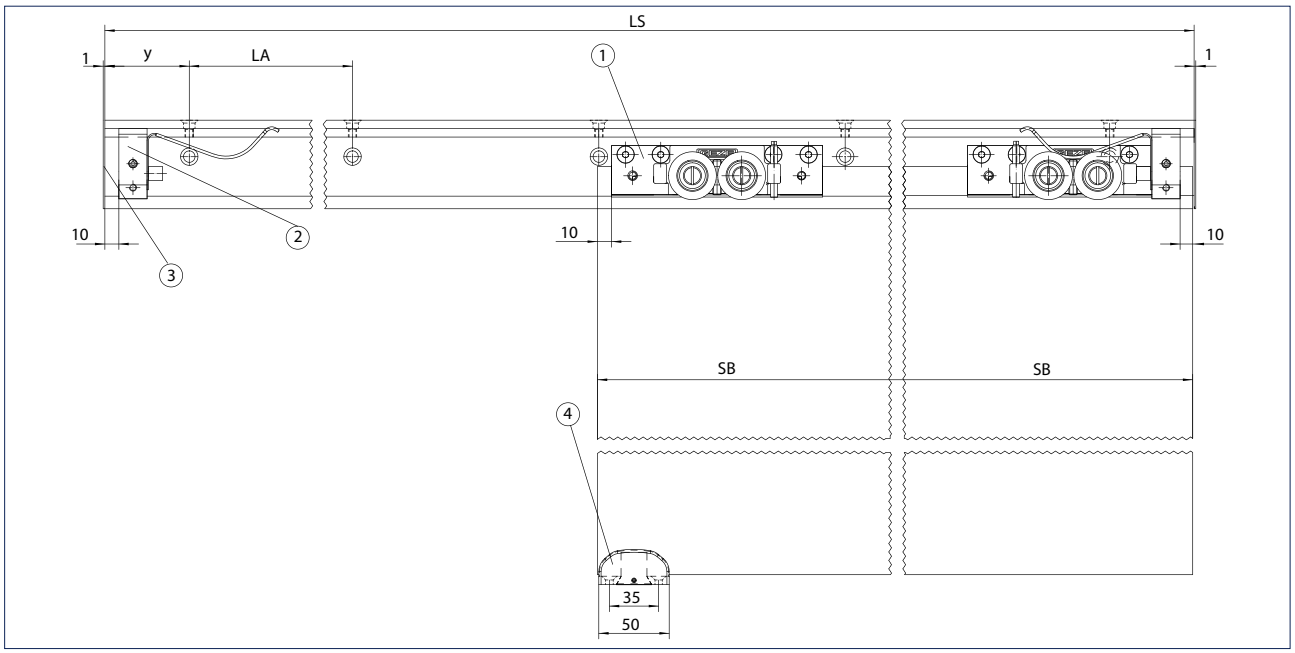

1 = Clamping roller carriage
2 = Latching action left/right
3 = Glued cover wall mounting
4 = Adjustable floor guide
LS = Track length
y = Distance end of track to centre of first drilled hole
t = Hole spacing
SB = Panel width

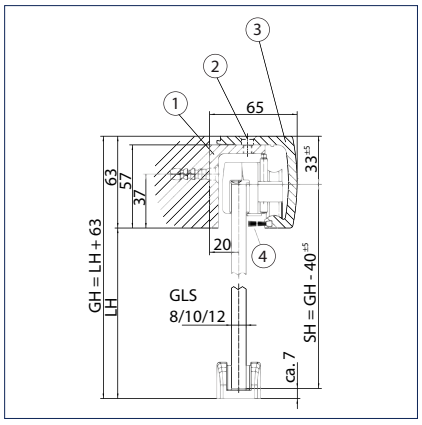

1 = Profile for wall mounting
2 = Screw DIN 7991 M6x12
3 = Profile for ceiling mounting
4 = Sealing brush
LH = Clear height
GLS= Thickness of glass
SH = Panel height
GH = Total height

Ceiling mounting
Drawing No. 10901-ep02

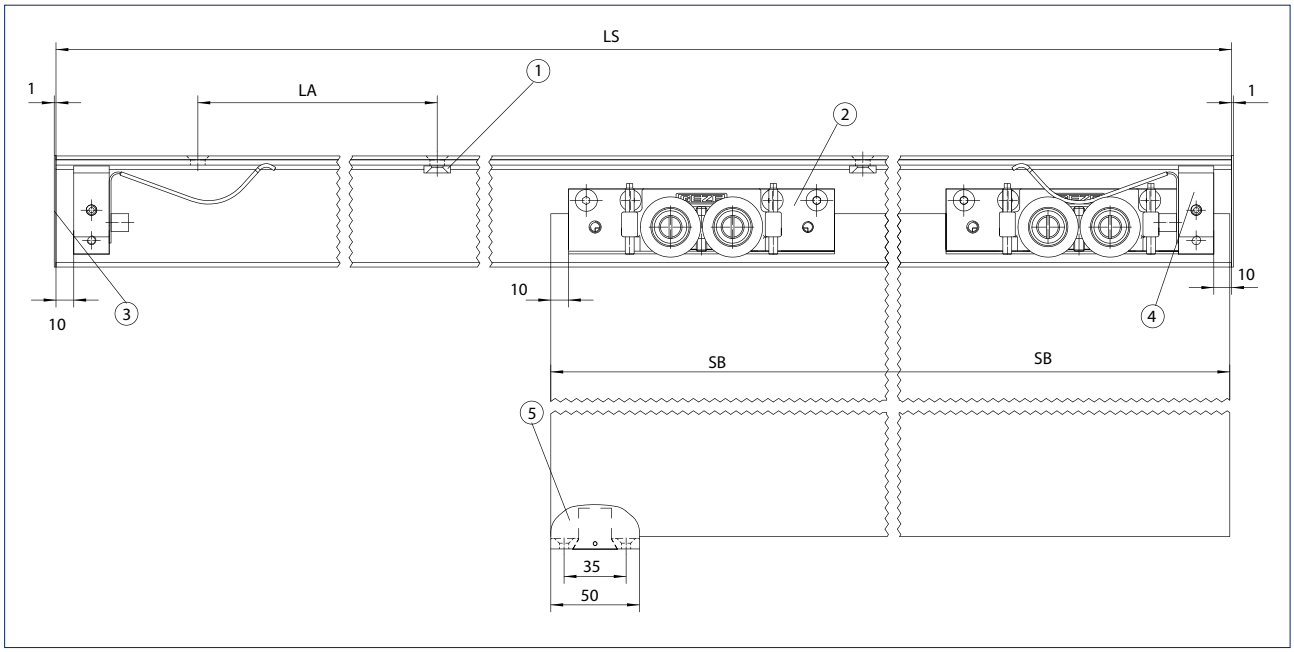

1 = Fixing disc
2 = Clamping roller carriage
3 = Glued cover ceiling mounting
4 = Latching action left/right
5 = Adjustable floor guide
LS = Track length
LA = Hole spacing
SB = Panel width

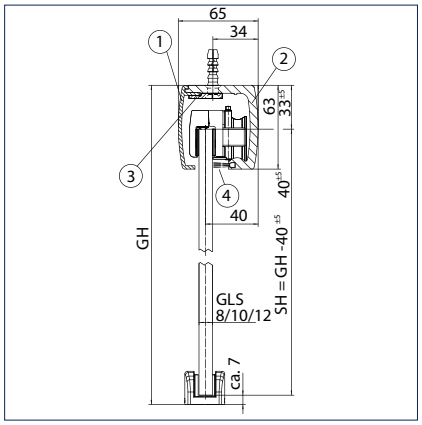

1 = Cover profile for ceiling mounting
2 = Profile for ceiling mounting
3 = Fixing disc
4 = Sealing brush
SH = Panel height
GH = Total height
GLS= Thickness of glass

Ceiling mounting with fixed panel
Drawing No. 10901-ep03

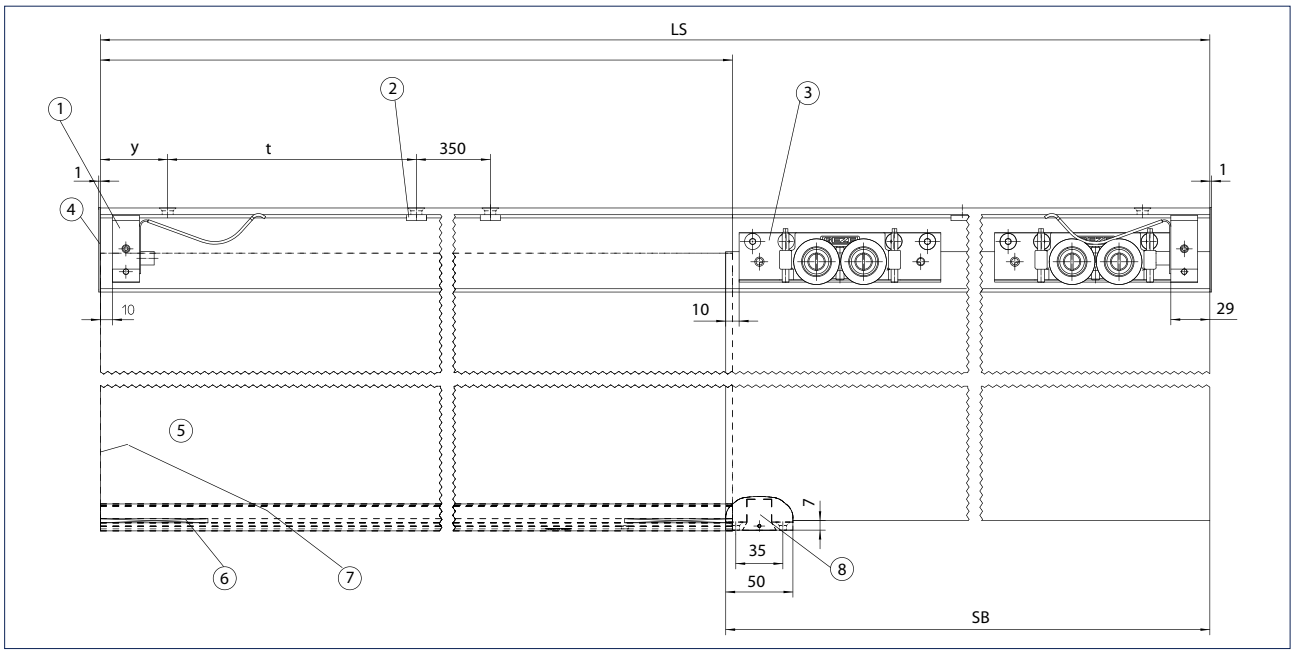

1 = Latching action left/right
2 = Fixing disc
3 = Clamping roller carriage
4 = Glued cover fixed panel
5 = GEZE fixed panel profile or U-profile on site
6 = Glazing block and cover cap
7 = Fixed panel profile
8 = Adjustable glass floor guide
LS = Track length
SB = Panel width
t = Hole spacing
y = Distance end of track to centre of first drilled hole

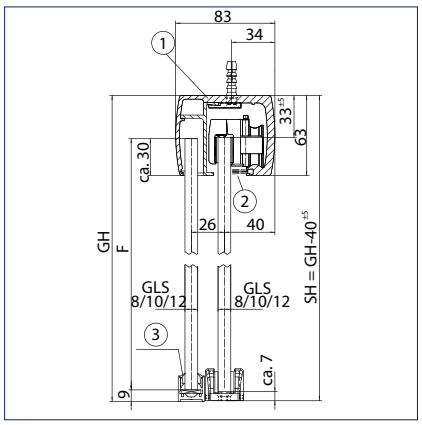

1 = Profile for ceiling mounting with fixed panel
2 = Sealing brush
3 = Seal
GH = Total height
F = Fixed panel height
GLS = Thickness of glass
SH = Panel height

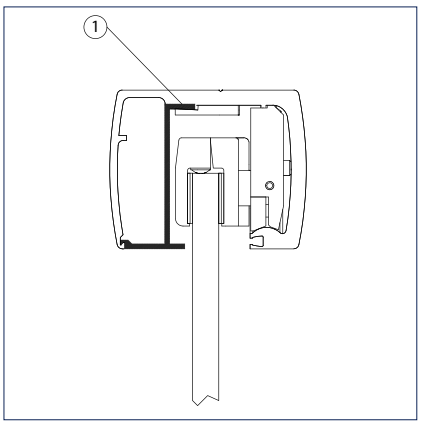

1 = Profile for fixed panel cover

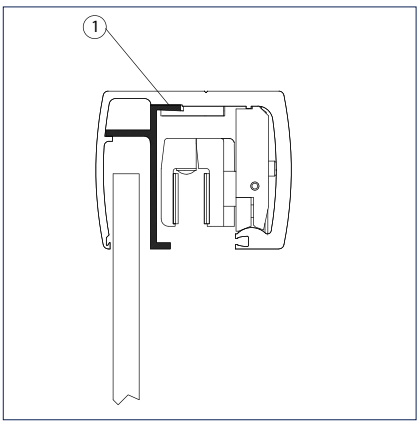

1 = Profile for fixed panel installation

GEZE Levolan 150 - Order information

Description	Leaf width from - to	Length	Version	ID.No.
Complete set Levolan 150/2* For ceiling mounting	500 mm 840 mm	1650 mm	EV1	136980
	500 mm 1040 mm	2050 mm	EV1	136983
	500 mm 1240 mm	2450 mm	EV1	136985
	500 mm 840 mm	1650 mm	stainless steel colour	136982
	500 mm 1040 mm	2050 mm	stainless steel colour	136984
	500 mm 1240 mm	2450 mm	stainless steel colour	136986
Complete set Levolan 150/2* configured to customer wishes				137092
Complete set Levolan 150/2* for wall assembly	500 mm 840 mm	1650 mm	EV1	136987
	500 mm 1040 mm	2050 mm	EV1	136989
	500 mm 1240 mm	2450 mm	EV1	136991
	500 mm 840 mm	1650 mm	stainless steel colour	136988
	500 mm 1040 mm	2050 mm	stainless steel colour	136990
	500 mm 1240 mm	2450 mm	stainless steel colour	136992
Accessories				
U-profile Perlan, Levolan fixed panel		1500 mm	EV1	126966
		3000 mm	EV1	126964
		6000 mm	EV1	126965
			stainless steel colour	148236
		6050 mm	stainless steel colour	128294
U-profile Perlan, Levolan fixed panel Bespoke			EV1	128076
			stainless steel colour	128295
Track for Levolan 150/2 Bespoke			EV1	135470
			stainless steel colour	135471
Track for Levolan 150/2		1650 mm	EV1	135462
		2050 mm	EV1	135464
		2450 mm	EV1	135466
		6250 mm	EV1	137095
		1650 mm	stainless steel colour	135463
		2050 mm	stainless steel colour	135465
		2450 mm	stainless steel colour	135467
		6000 mm	stainless steel colour	137096

GEZE SLIDING DOOR SYSTEMS

Description	Leaf width from - to	Length	Version	ID.No.
Track fixed panel Levolan 150/2 For ceiling mounting		6250 mm	EV1	135473
		6000 mm	stainless steel colour	135474
Track fixed panel Levolan 150/2 For ceiling mounting, bespoke			EV1	135475
			stainless steel colour	135476
Wall profile for Levolan 150		1650 mm	EV1	127180
		2050 mm	EV1	127181
		2450 mm	EV1	127182
		6250 mm	EV1	127338
		6000 mm	EV1	129139
		6000 mm	stainless steel colour	129140
		1650 mm	stainless steel colour	128820
		2050 mm	stainless steel colour	128821
		2450 mm	stainless steel colour	128822
Wall profile for Levolan 150 Bespoke			EV1	128206
			stainless steel colour	130109
Levolan 150 profile for fixed panel cover			EV1	150348
			nirofarbig	150349
Levolan 150 profile for fixed panel cover Bespoke			EV1	150350
			nirofarbig	150351
Levolan 150 profile for fixed panel installation			EV1	150405
			nirofarbig	150406
Levolan 150 profile for fixed panel installation Bespoke			EV1	150407
			nirofarbig	150408
Cover profile for ceiling mounting Levolan 150		6000 mm	EV1	129233
		1650 mm	EV1	127245
		2050 mm	EV1	127246
		2450 mm	EV1	127247
		6000 mm	stainless steel colour	129234
		1650 mm	stainless steel colour	128814
		2050 mm	stainless steel colour	128815
		2450 mm	stainless steel colour	128816

Description	Leaf width from - to	Length	Version	ID.No.
Cover profile for ceiling mounting Levolan 150 Customized			EV1	128207
			stainless steel colour	130110
Clamping profile for attaching wooden/metal leaves for the attachment of door leaves made of wood / metal / plastic to Levolan 60 / 150		1000 mm	EV1	146957
		1500 mm	EV1	146958
Clamping profile for attaching wooden/metal leaves Customized			EV1	146959
Brush sealing profile for Levolan 150/2		1650 mm		137175
		2050 mm		137178
		2450 mm		137179
Roller carriage set Levolan 150* 2 pcs., up to 150 kg leaf weight, including clamping inserts for 8-12 mm ESG				128874
Adjustable glass floor guide Variable adjustment for glass thickness 8-13,5 mm, with silencing guide with structured glass surfaces, without attachment material			silver-coloured	120417
			stainless steel colour	148019
			acc. to RAL	149657
Frieze band for adjustable glass floor guide for use with structured glass or rough surface				143869
Stainless steel floor guide For 8, 10, 12 mm glass			Stainless steel	134990
Door pull handle, configured			Stainless steel	127616
Flush pull, 8-12 mm glass Closed, outer diameter 60 mm, glass drill hole 40 mm			Stainless steel	138670
Flush pull, 8-12 mm glass Open, outer diameter 70 mm, glass drill hole 60 mm, specify glass thickness when ordering			Stainless steel	127617
Flush pull, 15-80 mm wood Outer diameter 60 mm, specify leaf thickness when ordering			Stainless steel	127614
Glass seal for Perlan / Levolan fixed panel for 8 / 10 / 12 mm glass thickness		12000 mm	grey	126869
Buffer for continuous floor guide				124655
Buffer for continuous glass floor guide				124656
End stop set for Levolan 150/2 2 pcs. (left, right), including 2 x hold-open springs				136705
End cover set with 2 x glazing supports for use with U-profile fixed panel on Perlan / Levolan systems			EV1	127001
			stainless steel colour	128361
End cover set for Levolan 150/2 For ceiling mounting			EV1	136369
			stainless steel colour	136370
End cover set for Levolan 150/2 for fixed panel			EV1	136371
			stainless steel colour49	136372
End cover set for Levolan 150/2 for wall assembly			EV1	136373
			stainless steel colour	136374
Clamping insert glass clamping plate 45 mm and Levolan 150 for 2 glass clamping plates, for use with 12.7 mm (1/2 inch) ESG				133022

GEZE SLIDING DOOR SYSTEMS

Description	Leaf width from - to	Length	Version	ID.No.
Set VSG glued fixing for use with VSG glass in connection with glass clamping plate 45 mm and Levolan 150, for 2 clamping plates, WITHOUT adhesive				133099
Ceiling mounting fixing set (20 pcs.)				129397
Fixing screws for the wall assembly (35 pcs.)				129033
Glass/metal bonding set 5x1 g for up to 5 doors				133056
Glass/metal bonding set 50 g for up to 30 doors				133039

* For glass thickness > 11 mm: you can order 1 x ID 153745 in addition to the set without charge

GEZE Levolan 150 (Photo: Studio BE)

GEZE Levolan 150 SoftStop

Strong design – gently damped

With the GEZE Levolan 150 SoftStop, the variant with draw-in damping, glass and wooden sliding doors up to 80 kg can be realised without additional leaf processing. Glass and wooden sliding doors can be made effortlessly. The height adjustment of the door leaf via the roller carriage permits the optimum adaptation of the sliding door to the structural situations. The smooth-running rollers and roller carriages guarantee maximum sliding comfort and a long life span. The optional GEZE Levolan 150 draw-in damping guarantees additional safety and comfort. A damping feature gently brakes the closing movement of the door about 10 cm before the end of the guide rail. The door leaves are then automatically guided gently and safely into the end position, With no more banging into the frame or buffer. The risk of fingers being trapped is practically excluded. The GEZE Levolan 150 SoftStop is retro-fittable and adapts the sliding door to changing user requirements e.g. for children or the elderly. Two-sided draw-in damping is available for Levolan 150 SoftStop even for slim door leaf widths from 975 mm.

GEZE Levolan 150 SoftStop

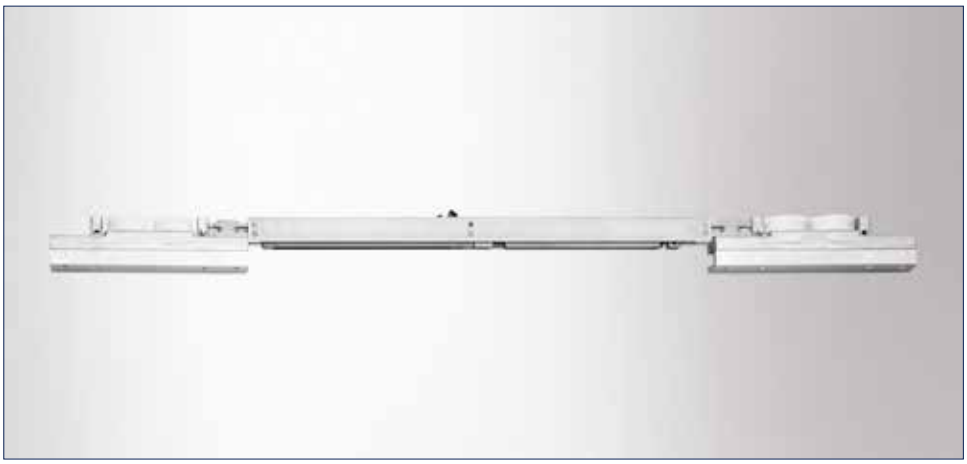

Application range

- For ESG (toughened safety glass) 8, 10, 12 mm as well as laminated safety glass up to 12.76 mm with additional laminated safety glass adhesive kit (without glass preparation) and wooden leaf
- For all single- and multiple-leaf sliding doors
- Straightforward, direct ceiling mounting or mounting using brackets on wall and ceiling
- Damped on one or both sides
- Quiet running makes it particularly well suited for doors in living and office spaces

Technical data

Product features	GEZE Levolan 150 SoftStop
Door material	Glass, Wood
Leaf weight (max.)	80 kg
Number of leaves	1-leaf, 2-leaf
Corrosion protection class	2
Type of installation	Wall installation, Ceiling installation
Fixed panel	●
Draw-in damping	●

● = YES

Levolan SoftStop
Drawing No. 10901-ep-07

Wall assembly
Drawing No. 10901-ep-08

Ceiling mounting
Drawing No. 10901-ep-09

Ceiling mounting with fixed panel on one side
Drawing No. 10901-ep-10

Ceiling mounting with fixed panel on both sides
Drawing No. 10901-ep-11

Example:
With long glass leaf on both sides:

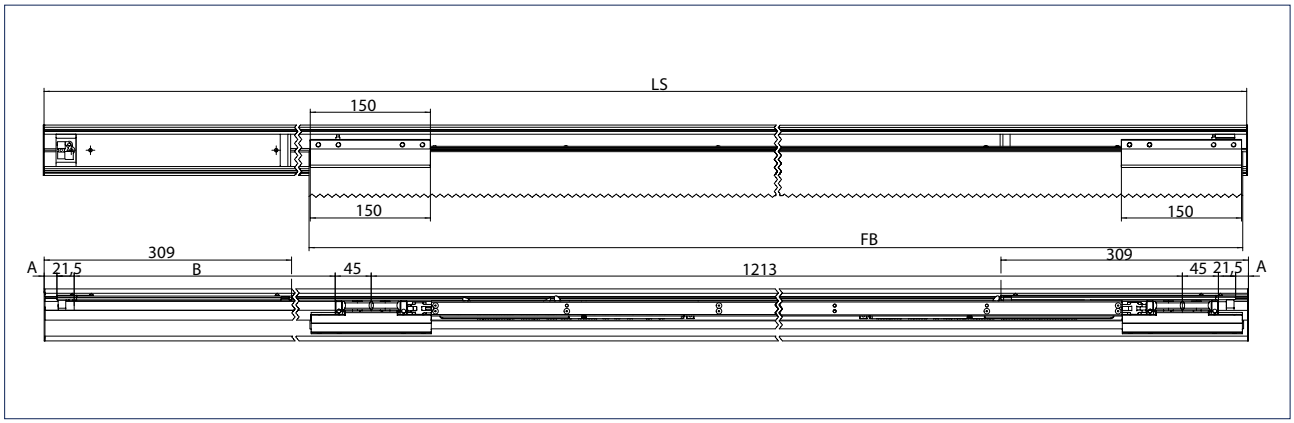

LS = Track length
FB = Leaf width

Mounting with glass leaf, damping in both directions, Levolan SoftStopDuo:

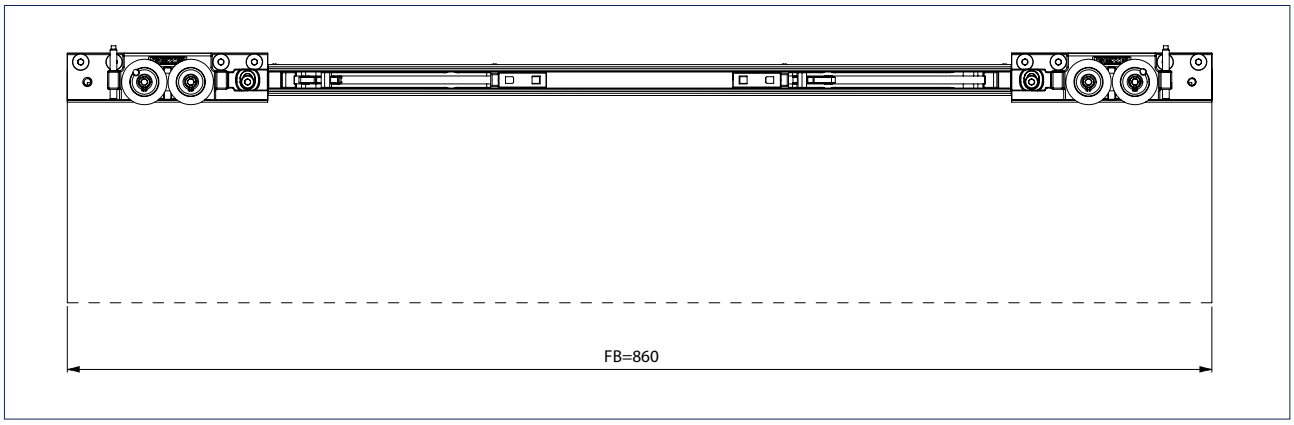

FB = Leaf width

With glass leaf on one side, short:

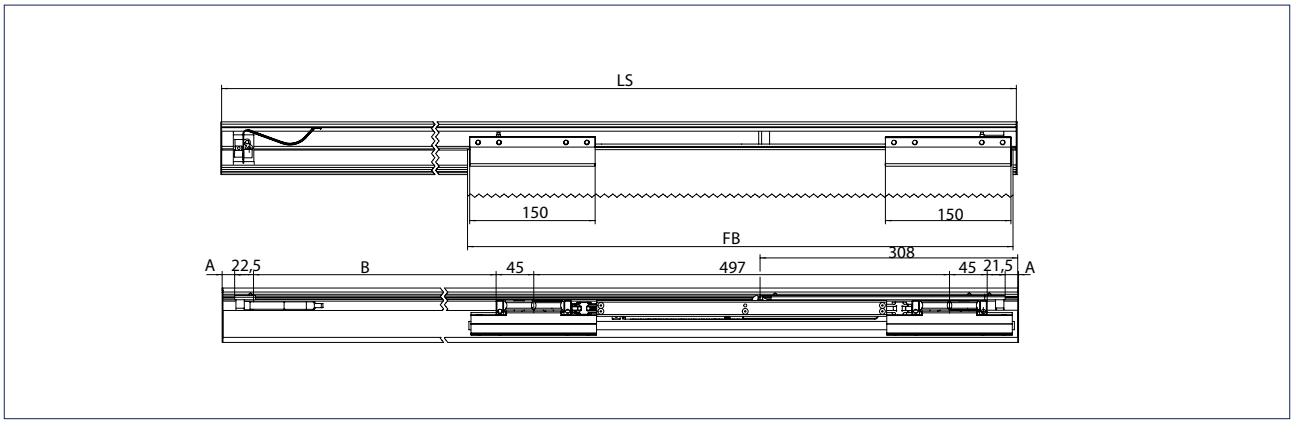

LS = Track length
FB = Leaf width

Wall assembly

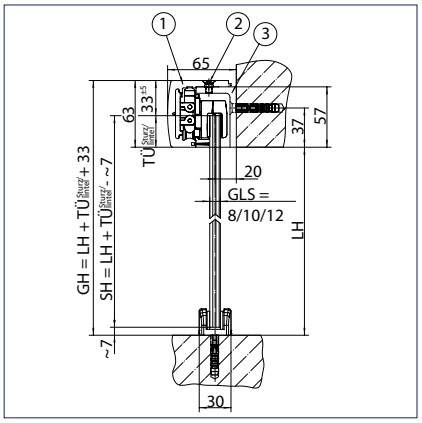

1 = Standard track
2 = Set of attachment screws
3 = Profile for wall mounting
GH = Total height
LH = Clear height
TÜ = Door protrusion
SH = Panel height
SD = Panel thickness

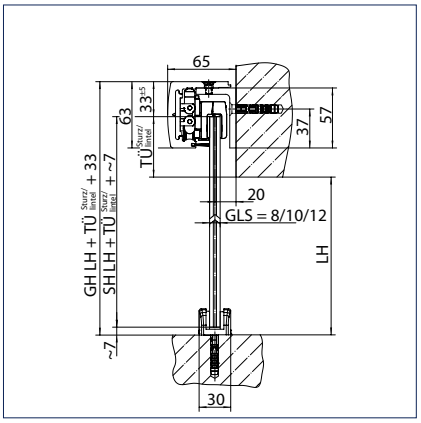

GH = Total height
LH = Clear height
SH = Panel height
TÜ = Door protrusion

Ceiling mounting:

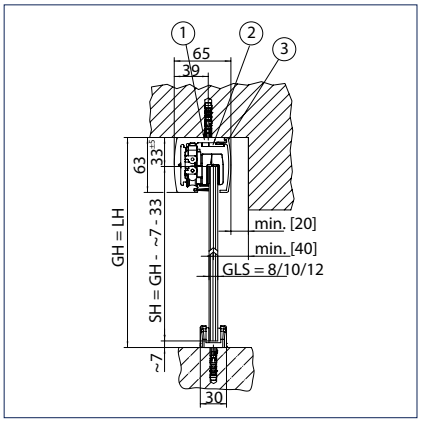

1 = Standard track
2 = Set of attachment screws
3 = Cover profile for ceiling mounting
GH = Total height
LH = Clear height
SH = Panel height
GLS = Thickness of glass

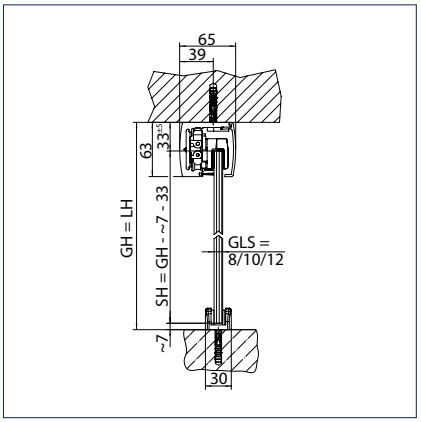

GH = Total height
LH = Clear height
SH = Panel height
GLS = Thickness of glass

Ceiling mounting with fixed panel

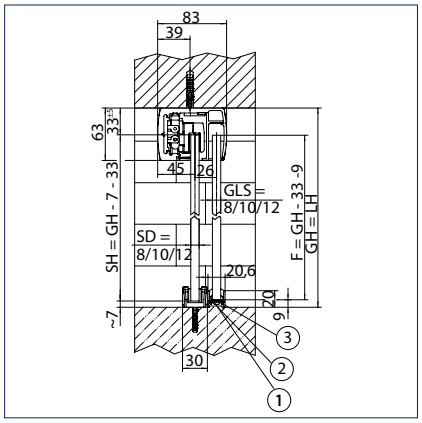

1 = Optional seal
2 = Optional U-profile fixed panel
3 = Optional glazing block and cover cap set
SH = Panel height
GH = Total height
GLS= Thickness of glass
F = Fixed panel height
LH = Clear height

GEZE Levolan 150 SoftStop - Order information

Description	Leaf width from - to	Length	Version	ID.No.
Complete set Levolan 150/2 with Levolan SoftStop, for ceiling mounting, up to 80 kg leaf weight. Levolan SoftStop on one side, with 2450 mm track on both sides.	650 mm 1000 mm	2050 mm	EV1	136377
	975 mm 1240 mm	2450 mm	EV1	136379
	650 mm 1000 mm	2050 mm	stainless steel colour	136378
	975 mm 1240 mm	2450 mm	stainless steel colour	136380
Complete set Levolan 150/2 with Levolan SoftStop, for wall mounting, up to 80 kg leaf weight. Levolan SoftStop on one side, with 2450 mm track on both sides	650 mm 1000 mm	2050 mm	EV1	136383
	975 mm 1240 mm	2450 mm	EV1	136385
	650 mm 1000 mm	2050 mm	stainless steel colour	136384
	975 mm 1240 mm	2450 mm	stainless steel colour	136386
Accessories				
Levolan SoftStop set, short version, dampening on one side, up to 80 kg for Levolan 150/2, comprising: 1 x damping unit on one side, 2 x mounting for Levolan 150 roller carriage, 1 x tail hook	650 mm 1000 mm			135495
Levolan SoftStop set, medium version, dampening on one side, up to 80 kg for Levolan 150/2, comprising: 1 x damping unit on one side, 2 x mounting for Levolan 150 roller carriage, 1 x tail hook	975 mm 1365 mm			135496
Set Levolan SoftStopDuo, damped on both sides, up to 80 kg for Levolan 150/2, comprising: 1 x damping unit on both sides, 2 x mounting for Levolan 150 roller carriage, 2 x tail hook	860 mm 1365 mm			150471
Levolan SoftStop set, long version, dampening on both sides, up to 80 kg for Levolan 150/2, comprising: 1 x damping unit on both sides, 2 x mounting for Levolan 150 roller carriage, 2 x tail hook	1365 mm 1700 mm			135499

Product information

Product information for sliding door systems

In accordance with the manufacturer's liability for their products, as defined in the "Product Liability Law" (§ 4 ProdHG), the following information about sliding door systems must be noted and observed. Non-observance releases the manufacturer from its statutory liability.

Product information and intended use

Within the context of this definition, sliding door fittings are fittings for sliding door leaves and other sliding elements (referred to in the following as "objects") which are not normally moved faster than walking pace. Sliding door fittings are used on plumb, vertically installed door leaves made of wood, plastic, glass, aluminium or steel or appropriate combinations of these materials. A floor guide is provided on the bottom horizontal edge of the door leaf. Special versions of products must be specified for use in damp rooms, for doors directly exposed to the elements or cross-winds, installed near the sea or for use in aggressive, corrosive environments. Intended use includes in particular correct installation. The fitting must have sufficient strength at all these points. The installation must not have any negative effects on or alter the function of the fitting. Buffers (door stops) must be used to limit the displacement path.

Misuse

Misuse, i.e. abnormal use or use not as intended, of sliding door fittings exists in particular if:

- The fittings are used with a higher load than the maximum capacity given in the catalogue and other product documents,
- Fittings are incorrectly installed or are inadequately fastened,
- Ambient temperatures are too high or too low,
- Particularly aggressive media can affect the fittings,
- Fittings are subject to inordinately large impact and falling loads and stresses,
- The position of the track excessively deviates from the horizontal,
- Foreign bodies can penetrate the track,
- The track rollers are operated too fast,
- Alternations are made which have not been agreed with the manufacturer,
- Obstructions are placed in the opening area or between the leaves or the object and therefore prevent intended use,
- Additional loads act on door leaves or objects,
- Reaching between the door leaves and door frame while sliding shut or closing the door or a person or parts of the body are in this area while the door is being closed.

Product performance

If the product performance is not explicitly specified in our catalogues, brochures, specifications and other product instructions, the requirements for our fittings must be agreed with us. Our regulations concerning fitting configurations are binding.

Product maintenance

Safety-relevant fittings must be regularly checked for secure fit and for wear. Re-tighten or replace fixing screws depending on the requirements. In addition, the following maintenance work must be carried out at least once a year:

- Check the function of all moving parts,
- Only use cleaning agents which do not have any negative effect on the fittings' corrosion protection,
- Defective fittings are to be replaced,
- Fitting adjustment work and replacements must be carried out by suitably qualified personnel/firm.

Duty to inform and instruct

The following material is available to the designer, specialist trade, installation firms and personnel and the user as fulfilment of the duty to inform and instruct:

- Catalogues, brochures
- Tender specification texts, tender documents
- Door stop, opening direction and installation instructions, installation drawings

To ensure correct use, proper function and maintenance of the fittings

- Architects and designers are required to request, note and follow the necessary product information,
- Specialist trade outlets are required to note and follow the product information and notes in the price lists and in particular to request all necessary instructions and to pass them on to the installation firms and personnel,
- Installation firms and personnel are required to note and follow all product information and to pass it on to their client and the user.

Perlan AUT fundamental safety aspects

Fundamental danger

Dangerous electric voltages: The Perlan AUT is operated with dangerous electrical voltage. Authorised persons only, using the tools intended for this purpose, may carry out installation , dismantling and connection work on control switches and drives. Before starting any work, the power supply must be switched off and secured against being switched on again without authorisation.

Power connections

The Perlan AUT may only be connected in accordance with the data given in the technical data sheets.
All power connections must be able to be switched off on site.

Safety precautions

- Location of the installation instructions: The installation instructions must be kept in a safe place by the person/company responsible for installation or by maintenance personnel. They are responsible for correct installation and maintenance of the system.
- Removal of safety devices: Do not remove or disable any of the safety devices. An exception exists in the case of the authorised service personnel. Following a service, normal operation may not be resumed until all safety devices have been attached and checked.

Spare parts to be used

Original GEZE spare parts only may be used for maintenance and repair purposes.

Classification to EN 1527:1998

Category of use (1st number)

No category of use defined.

Duration of operability (2nd number)

- Class 1 = 2,500 cycles
- Class 2 = 5,000 cycles
- Class 3 = 10,000 cycles
- Class 4 = 25,000 cycles
- Class 5 = 50,000 cycles
- Class 6 = 100,000 cycles

Door weight (3rd number)

- Class 1 = Door weight up to 50 kg
- Class 2 = Door weight from 51 kg to 100 kg
- Class 3 = Door weight from 101 kg to 330 kg
- Class 4 = Door weight more than 330 kg

Fire resistance (4th number)

- Class 0 = Not suitable for use on fire-proof doors
- Class 1 = Suitable for use on fire-proof doors

Safety (5th number)

No requirement for these products.

Corrosion behaviour (6th number)

The products are divided into classes 1 - 4 according to the 5 classes specified in EN 1670. Class 0 is reserved for untested products.

Protection (7th number)

No class defined for protection.

Type of door (8th number)

- Class 1 = sliding door
- Class 2 = folding door (2-leaf)
- Class 3 = multi-leaf folding door

Initial friction (9th number)

There are three classes:

Door weight	up to 50 kg	51-100 kg	101-330 kg	> 330 kg
Class 1	50 N	80 N	100 N	5 % of door weight
Class 2	40 N	60 N	5 % of door weight	4 % of door weight
Class 3	30 N	40 N	4 % of door weight	3 % of door weight

POTENTIAL APPLICATIONS OF GEZE PRODUCTS

You will find more product information in the relevant brochures, see ID numbers.

Door technology	
01	Overhead door closers ID 091593, ID 091594
02	Hold-open systems ID 091593, ID 091594
03	Integrated door closers ID 091609
04	Floor springs ID 091607
05	Sliding fitting systems and linear guides ID 123605, ID 008770, ID 000586
Automatic door systems	
06	Swing doors ID 144785
07	Sliding, telescopic and folding doors ID 143639
08	Circular and semi-circular sliding doors ID 135772
09	Revolving doors ID 132050
10	Actuation devices and sensors ID 142655
Smoke and heat extraction and window technology	
11	Fanlight opening systems ID 127787
12	Electric opening and locking systems ID 154851
13	Electrical spindle and linear drives ID 154851
14	Electric chain drives ID 154851
15	Smoke and heat extraction systems ID 154851
Safety technology	
16	Emergency exit systems ID 132408
17	Access control systems ID 132158
18	Panic locks ID 132848
19	Electric strikes ID 148666
20	Building management system ID 132408
Glass systems	
21	Manual sliding wall systems (MSW) ID 104377
22	Integrated all-glass systems (IGG) ID 104366
23	GEZE Patch fittings mono glass systems ID 122521

POTENTIAL APPLICATIONS OF GEZE PRODUCTS

Door technology

The functionality, superior performance and reliability of GEZE door closers are impressive. A common design across the range, the ability to use them on all common door leaf widths and weights, and the fact that they can be individually adjusted makes their selection simple. They are continually being improved and enhanced with up-to-date features. For example, the requirements of fire protection and accessibility are fulfilled with a door closer system.

Automatic door systems

GEZE automatic door systems open up a huge variety of options in door design. The latest, innovative high-performance drive technology, safety, ease of accessibility and first class universal drive design set them apart. GEZE offers complete solutions for individual requirements. A dedicated division is responsible for the development and construction of individual special designs.

Smoke and heat extraction and window technology

GEZE smoke and heat extraction systems and ventilation technology provide complete systems solutions combining the many requirements of different types of windows. We supply a full range from energy efficient drive systems to natural ventilation and complete solutions for supplying and extracting air, also as certified SHEVs.

Safety technology

GEZE safety technology sets the standards where preventative fire protection, access control and anti-theft security in emergency exits are concerned. For each of these objectives GEZE offers tailored solutions, which combine the individual safety requirements in one intelligent system and close doors and windows in case of danger in a coordinated manner.

Building systems

In GEZE's Building Management System GEZE door, window and safety products can be integrated in to the security and control systems of the building. A central control and visualisation system monitors various automation components in the building and offers security through many different networking capabilities.

Glass systems

GEZE glass systems stand for open and transparent interior design. They can either blend discreetly into the architecture of the building or stand out as an accentuated feature. GEZE offers a wide variety of technologies for functional, reliable and aesthetic sliding wall or sliding door systems providing security with lots of design scope.

GEZE GmbH
P.O. Box 1363
71226 Leonberg
Germany

GEZE GmbH
Reinhold-Vöster-Straße 21-29
71229 Leonberg
Germany
Telefon +49 7152 203 0
Telefax +49 7152 203 310
www.geze.com

Germany
GEZE Sonderkonstruktionen GmbH
Planken 1
97944 Boxberg-Schweigern
Tel. +49 7930 9294 0
Fax +49 7930 9294 10
sk.de@geze.com

GEZE GmbH
Niederlassung Süd-West
Breitwiesenstraße 8
71229 Leonberg
Tel. +49 7152 203 594
Fax +49 7152 203 438
leonberg.de@geze.com

GEZE GmbH
Niederlassung Süd-Ost
Parkring 17
85748 Garching bei München
Tel. +49 7152 203 6440
Fax +49 7152 203 77050
muenchen.de@geze.com

GEZE GmbH
Niederlassung Ost
Bühringstraße 8
13086 Berlin (Weißensee)
Tel. +49 7152 203 6840
Fax +49 7152 203 76849
berlin.de@geze.com

GEZE GmbH
Niederlassung Mitte/Luxemburg
Adenauerallee 2
61440 Oberursel (b. Frankfurt)
Tel. +49 7152 203 6888
Fax +49 7152 203 6891
frankfurt.de@geze.com

GEZE GmbH
Niederlassung West
Heltorfer Straße 12
40472 Düsseldorf
Tel. +49 7152 203 6770
Fax +49 7152 203 76770
duesseldorf.de@geze.com

GEZE GmbH
Niederlassung Nord
Haus 11, 1. OG - Theodorstr. 42-90
22761 Hamburg-Bahrenfeld
Tel. +49 7152 203 6600
Fax +49 7152 203 76608
hamburg.de@geze.com

GEZE Service GmbH
Niederlassung Süd-West
Reinhold-Vöster-Straße 25
71229 Leonberg
Tel. +49 1802 923392
Fax +49 7152 9233 359
service-leonberg.de@geze.com

GEZE Service GmbH
Niederlassung Süd
Parkring 17
85748 Garching bei München
Tel. +49 1802 923392
Fax +49 7152 9233 859
service-muenchen.de@geze.com

GEZE Service GmbH
Niederlassung Mitte
Oberurseler Str. 69
61440 Oberursel
Tel. +49 1802 923392
Fax +49 7152 9233 659
service-oberursel.de@geze.com

GEZE Service GmbH
Niederlassung West
Heltorfer Straße 12
40472 Düsseldorf
Tel. +49 1802 923392
Fax +49 7152 9233 559
service-duesseldorf.de@geze.com

GEZE Service GmbH
Niederlassung Nord-Ost
Bühringstraße 8
13086 Berlin (Weißensee)
Tel. +49 1802 923392
Fax +49 7152 9233 759
service-berlin.de@geze.com

GEZE Service GmbH
Niederlassung Nord
Theodorstr. 42-90, Haus 11
22761 Hamburg
Tel. +49 1802 923392
Fax +49 7152 9233 459
service-hamburg.de@geze.com

Austria
GEZE Austria
Wiener Bundesstrasse 85
A-5300 Hallwang
Tel: +43 6225 87180
Fax: +43 6225 87180 299
austria.at@geze.com

Baltic States
GEZE GmbH Baltic States office
Dzelzavas iela 120 S
1021 Riga
Tel. +371 678960 35
Fax +371 678960 36
office-latvia@geze.com

Benelux
GEZE Benelux B.V.
Industrieterrein Kapelbeemd
Steenoven 36
5626 DK Eindhoven
Tel. +31 4026290 80
Fax +31 4026290 85
benelux.nl@geze.com

Bulgaria
GEZE Bulgaria - Trade
Representative Office
Nickolay Haitov 34 str., fl. 1
1172 Sofia
Tel. +359 247043 73
Fax +359 247062 62
office-bulgaria@geze.com

China
GEZE Industries (Tianjin) Co., Ltd.
Shuangchenzhong Road
Beichen Economic Development
Area (BEDA)
Tianjin 300400, P.R. China
Tel. +86 2226973995 0
Fax +86 22269727 02
chinasales@geze.com.cn

GEZE Industries (Tianjin) Co., Ltd.
Branch Office Shanghai
11D, Building 2, Youyou Century
Plaza
No. 428, South Yanggao Road
200127 Pudong, Shanghai, P.R. China
Tel. +86 21 52340960
Fax +86 21 64472007
chinasales@geze.com.cn

GEZE Industries (Tianjin) Co., Ltd.
Branch Office Guangzhou
Room 17C3
Everbright Bank Building, No.689
Tian He Bei Road
510630 Guangzhou, P.R. China
Tel. +86 20387318 42
Fax +86 20387318 34
chinasales@geze.com.cn

GEZE Industries (Tianjin) Co., Ltd
Branch Office Beijing
Room 1001, Tower D
Sanlitun SOHO
No. 8, Gongti North Road,
Chaoyang District
100027 Beijing, P.R.China
Tel. +86 10593593 00
Fax +86 10593593 22
chinasales@geze.com.cn

France
GEZE France S.A.R.L.
ZAC de l'Orme Rond
RN 19
77170 Servon
Tel. +33 1 606260 70
Fax +33 1 606260 71
france.fr@geze.com

Hungary
GEZE Hungary Kft.
Hungary-2051 Biatorbágy
Vendel Park
Huber u. 1.
Tel. +36 23532 735
Fax +36 23532 738
office-hungary@geze.com

Iberia
GEZE Iberia S.R.L.
C/ Andorra 24
08830 Sant Boi de Llobregat
(Barcelona)
Tel. +34 902194 036
Fax +34 902194 035
info@geze.es

India
GEZE India Private Ltd.
MF 2 & 3, Guindy Industrial Estate
Ekkattuthangal
Chennai 600 097
Tamilnadu
Tel. +91 44 306169 00
Fax +91 44 306169 01
office-india@geze.com

Italy
GEZE Italia S.r.l
Sede di Milano
Via Giotto 4
20040 Cambiago (MI)
Tel. +39 0295069 511
Fax +39 0295069 533
italia.it@geze.com

Sede di Roma
Via Lucrezia Romana, 91
00178 Roma
Tel. +39 06 726531 1
Fax +39 06 726531 36
roma@geze.biz

Poland
GEZE Polska Sp.z o.o.
ul. Annopol 21
03-236 Warszawa
Tel. +48 224 404 440
Fax +48 224 404 400
geze.pl@geze.com

Romania
GEZE Romania S.R.L.
IRIDE Business Park,
Str. Dimitrie Pompeiu nr. 9-9a,
Building 10, Level 2, Sector 2,
020335 Bucharest
Tel.: +40 212507 750
Fax: +40 212507 750
office-romania@geze.com

Russia
OOO GEZE RUS
Gamsonovskiy Per. 2
115191 Moskau
Tel. +7 495 93306 59
Fax +7 495 93306 74
office-russia@geze.com

Scandinavia – Sweden
GEZE Scandinavia AB
Mallslingan 10
Box 7060
18711 Täby, Sweden
Tel. +46 87323 400
Fax +46 87323 499
sverige.se@geze.com

Scandinavia – Norway
GEZE Scandinavia AB avd. Norge
Industriveien 34 B
2073 Dal
Tel. +47 63957 200
Fax +47 63957 173
norge.se@geze.com

Scandinavia – Denmark
GEZE Danmark
Branch office of GEZE Scandinavia AB
Mårkærvej 13 J-K
2630 Taastrup
Tel. +45 463233 24
Fax +45 463233 26
danmark.se@geze.com

Singapore
GEZE (Asia Pacific) Pte. Ltd.
21 Bukit Batok Crescent
#23-75 Wcega Tower
Singapore 658065
Tel: +65 6846 1338
Fax: +65 6846 9353
gezesea@geze.com.sg

South Africa
GEZE Distributors (Pty) Ltd.
118 Richards Drive, Halfway House,
Ext 111, P.O. Box 7934, Midrand 1685,
South Africa
Tel: + 27 113158 286
Fax: + 27 113158 261
info@gezesa.co.za

Switzerland
GEZE Schweiz AG
Zelglimatte 1A
6260 Reiden
Tel. +41 62 28554 00
Fax +41 62 28554 01
schweiz.ch@geze.com

Turkey
GEZE Kapı ve Pencere Sistemleri
San. ve Tic. Ltd. Sti.
İstanbul Anadolu Yakası Organize
Sanayı Bolgesi
Gazi Bulvari Caddesi 8.Sokak No:8
Tuzla-Istanbul
Tel. + 90 216 45543 15
Fax + 90 216 45582 15
office-turkey@geze.com

Ukraine
LLC GEZE Ukraine
ul. Viskoznaya, 17,
Building 93-B, Office 12
02660 Kiev
Tel./Fax +38 445012225
office-ukraine@geze.com

United Arab Emirates/GCC
GEZE Middle East
P.O. Box 17903
Jebel Ali Free Zone
Dubai
Tel. +971 48833 112
Fax +971 48833 240
gezeme@geze.com

United Kingdom
GEZE UK Ltd.
Blenheim Way
Fradley Park
Lichfield
Staffordshire WS13 8SY
Tel. +44 15434430 00
Fax +44 15434430 01
info.uk@geze.com

GEZE REPRESENTATIVE

ID No. 123605 · Version EN 150123 · Subject to change without notice